View thousands of Crane Specifications on FreeCraneSpecs.com

Terex Cranes

OLATHE, KANSAS 66061

U.S. PATENT NOS. 4211332, 4459786, 5012939 CANADA PAT. NO. 1097265

ECA

MODEL BT-2463

MAXIMUM LOAD CHART

RANGE DIAGRAM

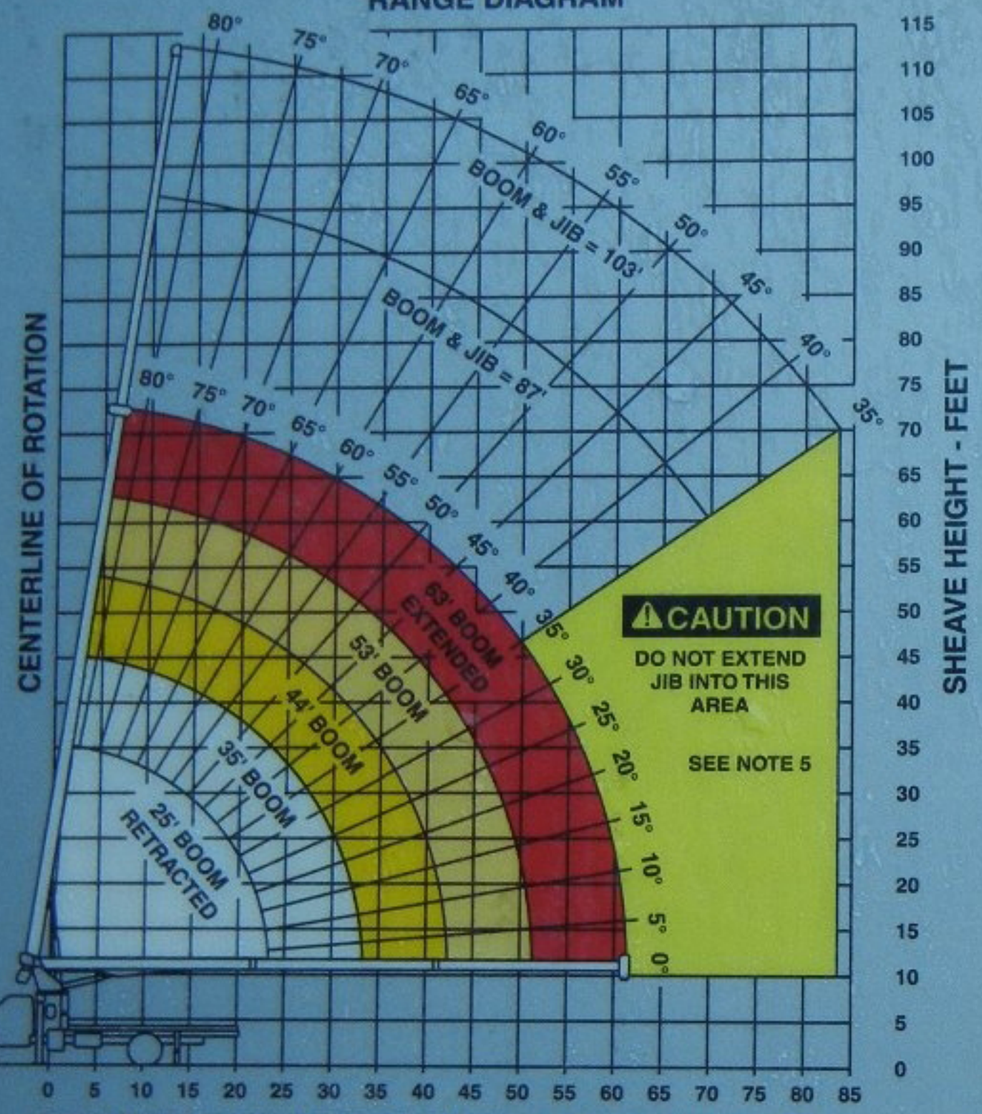

1 PART LINE	2 PART LINE	3 PART LINE
OVERHAUL BALL	CRANE LOAD BLOCK	AUX. BLOCK / CRANE LOAD BLOCK
LOADS UP TO	LOADS UP TO	LOADS UP TO
9,600 LBS. STD. CABLE	19,200 LBS. STD. CABLE	24,000 LBS. STD. CABLE
6,720 LBS. ROT. RESISTANT CABLE	13,440 LBS. ROT. RESISTANT CABLE	20,160 LBS. ROT. RESISTANT CABLE

CAUTION

ANTI-TWO-BLOCK SYSTEM MUST BE IN GOOD OPERATING CONDITION BEFORE OPERATING CRANE. REFER TO OWNER'S MANUAL.

KEEP AT LEAST 3 WRAPS OF LOADLINE ON DRUM AT ALL TIMES.

USE ONLY 9/16" DIAMETER CABLE WITH 33,600 LB. BREAKING STRENGTH ON THIS MACHINE.

THIS MACHINE COMPLIES WITH OSHA REGULATIONS 1910.180 AND 1926.550 WHERE APPLICABLE AT DATE OF MANUFACTURE

3-654-00600

LOAD RATINGS IN LBS. WITH OUTRIGGERS EXTENDED

BASE 2ND 3RD ∠

OPERATING RADIUS / LOADED BOOM ANGLE / BOOM LENGTH	∠	25 FT	∠	35 FT	∠	44 FT	∠	53 FT	∠	63 FT
5	76	24000								
8	69	16800	74	14200	78	14200				
10	64	14200	72	13400	76	13000	78	12600		
12	58	12200	68	11500	73	11100	76	10800	78	9425
15	49	10100	63	9525	69	9125	73	8825	76	7725
20	32	7425	53	7325	62	7025	67	6725	71	6425
25			42	5825	54	5525	61	5425	66	5225
30			26	4425	45	4525	55	4325	61	4225
35					35	3725	47	3625	56	3525
40					20	2825	39	3025	50	2925
45							29	2525	44	2425
50							14	1725	36	2125
55									27	1725
60									13	1225
	450		325		250		200		175	

NOTE: RATINGS ABOVE THE HEAVY LINE ARE BASED ON STRUCTURAL COMPETENCE AND NOT ON MACHINE STABILITY

AREA OF OPERATION

360° FULL CAPACITY WORK AREA W/ OPTIONAL FRONT STABILIZER

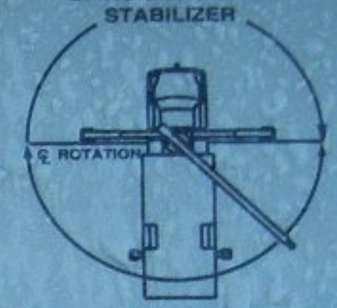

DEDUCTIONS FROM RATED LOADS FOR LOAD HANDLING DEVICES

AUXILIARY BLOCK: 50 LBS

OVERHAUL BALL: 125 LBS

CRANE LOAD BLOCK: 200 LBS

← STOWED JIB DEDUCTIONS

JIB CAPACITIES FOR ALL BOOM LENGTHS

CAPACITY ALERT SYSTEM IS NOT FUNCTIONAL WHEN LIFTING WITH JIB

LOADED BOOM ANGLE	35°	40°	45°	50°	55°	60°	65°	70°	75°	80°
RETRACTED 24 FT JIB	700	825	1000	1150	1340	1600	1900	2300	3100	4160
EXTENDED 40 FT JIB	520	580	650	730	810	930	1080	1400	1810	2260

DANGER

1. THE OPERATOR MUST READ AND UNDERSTAND THE OWNER'S MANUAL BEFORE OPERATING THIS CRANE.
2. POSITIONING OR OPERATION OF CRANE BEYOND AREAS SHOWN ON THIS CHART IS NOT INTENDED OR APPROVED EXCEPT WHERE SPECIFIED IN OWNER'S MANUAL.
3. LOADED BOOM ANGLES AT SPECIFIED BOOM LENGTHS GIVE ONLY AN APPROXIMATION OF THE OPERATING RADIUS. THE BOOM ANGLE BEFORE LOADING SHOULD BE GREATER TO ACCOUNT FOR DEFLECTIONS. DO NOT EXCEED THE OPERATING RADIUS FOR RATED LOADS.
4. USE RATING OF NEXT LONGER BOOM FOR BOOM LENGTHS NOT SHOWN. USE RATING OF NEXT GREATER RADIUS FOR LOAD RADII NOT SHOWN.
5. BOOM MUST BE FULLY RETRACTED WHEN JIB IS ERECTED BEFORE LOWERING BELOW 35° BOOM ANGLE. JIB HAS NO LIFTING CAPACITY BELOW A 35° BOOM ANGLE.
6. USE RATING OF NEXT LOWER BOOM ANGLE FOR BOOM ANGLES NOT SHOWN ON JIB LOAD RATING CHART.
7. LIFTING OFF THE MAIN BOOM POINT WHILE THE SWING AROUND JIB IS ERECTED IS NOT INTENDED OR APPROVED.
8. CRANE LOAD RATINGS ON OUTRIGGERS ARE BASED ON FREELY SUSPENDED LOADS WITH THE MACHINE LEVELED AND STANDING ON A FIRM UNIFORM SUPPORTING SURFACE. NO ATTEMPT SHALL BE MADE TO MOVE A LOAD HORIZONTALLY ON THE GROUND IN ANY DIRECTION.
9. PRACTICAL WORKING LOADS DEPEND ON SUPPORTING SURFACE. WIND AND OTHER FACTORS AFFECTING STABILITY SUCH AS HAZARDOUS SURROUNDINGS, EXPERIENCE OF PERSONNEL, AND PROPER HANDLING, MUST ALL BE TAKEN INTO ACCOUNT BY THE OPERATOR.
10. THE MAXIMUM LOAD WHICH MAY BE TELESCOPED IS LIMITED BY HYDRAULIC PRESSURE, BOOM ANGLE, AND BOOM LUBRICATION. IT IS SAFE TO ATTEMPT TO TELESCOPE ANY LOAD WITHIN THE LIMITS OF THE LOAD RATING CHART.

INFORMATION

1. DEDUCTIONS MUST BE MADE FROM RATED LOADS FOR STOWED JIB, OPTIONAL ATTACHMENTS, HOOKS AND LOADBLOCKS (SEE DEDUCTION CHART). WEIGHTS OF SLINGS AND OTHER LOAD HANDLING DEVICES SHALL BE CONSIDERED A PART OF THE LOAD.
2. CRANE LOAD RATINGS WITH OUTRIGGERS ARE BASED ON OUTRIGGERS AND STABILIZERS EXTENDED AND SET WITH ALL LOAD REMOVED FROM THE CARRIER WHEELS.
3. LOAD RATINGS DO NOT EXCEED 85% OF TIPPING LOAD.

12/16/2014 08:18

DEFINITIONS

1. OPERATING RADIUS IS THE HORIZONTAL DISTANCE FROM THE AXIS OF ROTATION TO THE CENTER OF THE VERTICAL HOIST LINE OR LOAD HOOK WITH LOAD SUSPENDED.
2. LOADED BOOM ANGLE AS SHOWN IN THE COLUMN HEADED BY ∠ IS THE INCLUDED ANGLE BETWEEN THE HORIZONTAL AND LONGITUDINAL AXES OF THE BOOM BASE AFTER LIFTING RATED LOAD AT RATED RADIUS.

REMOVAL OF THIS PLACARD IS A VIOLATION OF THE LAW