View thousands of Crane Specifications on FreeCraneSpecs.com

TRUCK CRANE

TL-200M

JAPANESE SPECIFICATIONS

TL

CARRIER MODEL	OUTLINE	SPEC. NO.
NISSAN DIESEL P-KW31M	4-section Boom, Single stage Jib	TL-200M-3-10103
MITSUBISHI P-K203		TL-200M-3-20103

Control No. JA-04

View thousands of Crane Specifications on FreeCraneSpecs.com

TL-200M-3-10103
TL-200M-3-20103

TL-200M

CRANE SPECIFICATIONS

CRANE CAPACITY

9.8m	Boom	20,000kg	at 3.5m	(7 part-line)
13.3m	Boom	17,500kg	at 4.0m	(7 part-line)
16.9m	Boom	14,500kg	at 4.5m	(7 part-line)
20.4m	Boom	9,500kg	at 6.5m	(4 part-line)
23.9m	Boom	7,500kg	at 7.5m	(4 part-line)
27.5m	Boom	6,500kg	at 7.5m	(4 part-line)
31.0m	Boom	6,000kg	at 7.5m	(4 part-line)
8.0m	Jib	2,750kg	at 75°	(1 part-line)
Single top		3,000kg		(1 part-line)

MAX. LIFTING HEIGHT
Boom 30.9m
Jib 38.9m

MAX. WORKING RADIUS
Boom 29.4m
Jib 30.7m

BOOM LENGTH
9.8m – 31.0m

BOOM EXTENSION
21.2m

BOOM EXTENSION SPEED
21.2m / 95s

JIB LENGTH
8.0m

MAIN WINCH SINGLE LINE SPEED
High range: 118m/min (4th layer)
Low range: 59m/min (4th layer)

MAIN WINCH HOOK SPEED
High range: 16.8m/min (7 part-line)
Low range: 8.4m/min (7 part-line)

AUXILIARY WINCH SINGLE LINE SPEED
High range: 100m/min (2nd layer)
Low range: 50m/min (2ndlayer)

AUXILIARY WINCH HOOK SPEED
High range: 100m/min (1 part-line)
Low range: 50m/min (1 part-line)

BOOM ELEVATION ANGLE
-3° – 80°

BOOM ELEVATION SPEED
-3° – 80° / 48s

SWING ANGLE
360° continue

SWING SPEED
2.4rpm

WIRE ROPE
Main Winch
16mm × 170m (Diameter×Length)
7×7+6×WS(31) Class C ordinary · Z twist
Spin-resistant wire rope
Breaking strength 18.7t
Auxiliary Winch
16mm × 85m (Diameter×Length)
7×7+6×WS(31) Class B ordinary · Z twist
Spin-resistant wire rope
Breaking strength 17.6t

BOOM
4-section hydraulically telescoping boom of box construction.
(stage 2: sequential; stages 3,4: synchronized)

BOOM EXTENSION
2 double-acting hydraulic cylinder
1 wire rope type telescoping device

JIB
1-staged swingaround boom extension which stores alongside boom base section.
Dual offset (5°, 30°) type.

SINGLE TOP
Single sheave. Mounted to main boom head for single line work.

HOIST
Hydraulic motor driven planetary gear reducer
With free-fall device.
Automatic brake (with foot brake for free-fall device)
2 single winches

BOOM ELEVATION
1 double-acting hydraulic cylinders

SWING
Hydraulic motor driven planetary gear reducer
Swing bearing
Swing free/lock changeover type
Hand brake

OUTRIGGERS
Fully hydraulic H-type (floats mounted integrally)
Slides and jacks each provided with independent operation device.
Full extended width 6.1m
Middle extended width 4.0m

FRONT JACK
Hydraulic operated type

MAX. OUTRIGGER LOAD
25.0t

HYDRAULIC PUMPS
3 gear pumps

HYDRAULIC OIL TANK CAPACITY
346 liters

SAFETY DEVICES
Automatic moment limiter (AML)
Working area control device
Over-winding cutout
Level gauge
Hook safety latch
Winch drum lock
Hydraulic safety valve
Telescopic counterbalance valve
Elevation counterbalance valve
Jack pilot check valve
Front jack over load alarm

EQUIPMENTS
Boom angle indicator
Oil cooler
Crane cab heater
Radio
Fan
Block

View thousands of Crane Specifications on FreeCraneSpecs.com

CARRIER SPECIFICATIONS

MANUFACTURER
NISSAN DIESEL MOTOR CO., LTD

CARRIER MODEL
P-KW31M

ENGINE
Model PE6
Type 4-cycle, in-line 6-cylinder, direct-injection water-cooled diesel engine
Piston displacement 11,670cc
Max. output 230PS at 2,200rpm
Max. torque 83kg·m at 1,300rpm

CLUTCH
Dry single-plate coil spring type

TRANSMISSION
6-forward and 1-reverse speeds
Constant-mesh gear (1st speed, reverse)
Synchronized-mesh gear (2nd – 6th speeds)

REDUCER
Hypoid gear type

FRONT AXLE
Reverse Elliot-type steel pipe cross section

REAR AXLE
Full floating, cast torque rods

SUSPENSION
Front Laminated leaf spring type
Rear Equalizer and torque rods

STEERING
Recirculating ball screw type with linkage power assistance

BRAKE SYSTEM
Service Brake
2-circuit hydro-pneumatic type, 6-wheels internal expanding brake
Parking Brake
Mechanically operated, duo-servo shoe type acting on drum at transmission case rear.
Auxiliary Brake
Electro-pneumatic operated exhaust brake

ELECTRIC SYSTEM
24 V DC. 2 batteries of 12V (120Ah)

FUEL TANK CAPACITY
200 liters

CAB
Two-man type

TIRES
Front 11.00-20-16PR
Rear 10.00-20-14PR

STANDARD EQUIPMENTS
Car heater
Car radio

GENERAL DATA

DIMENSIONS

Overall length		11,785mm
Overall width		2,490mm
Overall height		3,300mm
Wheel base		4,050mm + 1,300mm = 5,350mm
Tread	Front	2,020mm
	Rear	1,860mm

WEIGHTS

Gross vehicle weight	
Total	23,560kg
Front	6,500kg
Rear	17,060kg

PERFORMANCE

Max. traveling speed	65km/h
Gradeability (tan θ)	0.35
Min. turning radius	9.2m

View thousands of Crane Specifications on FreeCraneSpecs.com

CARRIER SPECIFICATIONS

MANUFACTURER
MITSUBISHI MOTOR CORPORATION

CARRIER MODEL
P-K203

ENGINE
Model 6D22
Type 4-cycle, in-line 6-cylinder, direct-injection water-cooled diesel engine
Piston displacement 11,149cc
Max. output 225PS at 2,200rpm
Max. torque 78kg·m at 1,400rpm

CLUTCH
Dry single-plate type, hydraulic control with clutch booster

TRANSMISSION
6-forward and 1-reverse speeds
Constant-mesh gear (1st speed, reverse)
Synchronized-mesh gear (2nd – 6th speeds)

REDUCER
1-stage speed reduction type
Hypoid gear type

FRONT AXLE
Reverse-elliot type steering knuckles

REAR AXLE
Full-floating type, cast-steel housing, Sheet-metal housing

SUSPENSION
Front Laminated semi-elliptical leaf spring type
With shock absorber
Rear Equalizer beam and torque rod type

STEERING
Recirculating ball screw type
Integral power steering

BRAKE SYSTEM
Service Brake
Foot operated full air brake on all wheels, air over hydraulic type, internal expanding leading and trailing shoe type, 2-circuit type
Parking Brake
Mechanically operated, internal expanding duo-servo shoe type acting on drum at transmission case rear.
Auxiliary Brake
Exhaust brake

ELECTRIC SYSTEM
24 V DC. 2 batteries of 12V (120Ah)

FUEL TANK CAPACITY
200 liters

CAB
Two-man type

TIRES
Front 11.00-20-16PR
Rear 10.00-20-14PR

STANDARD EQUIPMENTS
Car heater
Car radio

GENERAL DATA

DIMENSIONS

Overall length		11,785mm
Overall width		2,490mm
Overall height		3,300mm
Wheel base		4,050mm + 1,300mm = 5,350mm
Tread	Front	2,040mm
	Rear	1,845mm

WEIGHTS

Gross vehicle weight	
Total	23,560kg
Front	6,495kg
Rear	17,065kg

PERFORMANCE

Max. traveling speed	70km/h
Gradeability (tan θ)	0.35
Min. turning radius	9.5m

View thousands of Crane Specifications on FreeCraneSpecs.com

TOTAL RATED LOADS

(1)

Unit : ton

· Outriggers fully extended + Front jack (360°)
· Outriggers fully extended (Over rear · Over sides)

B (m) \ A	9.8 m	13.3 m	16.9 m	20.4 m	23.9 m	27.5m	31 m
3.0	20.00	17.50	14.50	9.50			
3.5	20.00	17.50	14.50	9.50			
4.0	18.00	17.50	14.50	9.50	7.50	6.50	
4.5	16.30	15.80	14.50	9.50	7.50	6.50	
5.0	14.85	14.40	13.25	9.50	7.50	6.50	6.00
5.5	13.65	13.25	12.20	9.50	7.50	6.50	6.00
6.0	12.30	12.20	11.30	9.50	7.50	6.50	6.00
6.5	11.20	11.00	10.50	9.50	7.50	6.50	6.00
7.0	10.25	10.00	9.80	8.85	7.50	6.50	6.00
7.5	9.40	9.20	9.10	8.35	7.50	6.50	6.00
8.0	8.65	8.45	8.35	7.90	7.20	6.25	5.70
9.0		7.05	7.10	7.00	6.65	5.75	5.20
10.0		6.05	5.90	6.35	6.20	5.30	4.75
12.0			4.05	4.45	4.65	4.50	4.00
14.0			2.90	3.25	3.45	3.55	3.50
16.0				2.40	2.60	2.75	2.85
18.0				1.75	2.00	2.10	2.20
20.0					1.50	1.65	1.75
22.0					1.05	1.25	1.35
24.0						0.90	1.05
26.0							0.75
28.0							0.55
29.4							0.40

E (°) \ C / D	8.0 m	
	5°	30°
80	2.75	1.35
75	2.75	1.35
70	2.30	1.30
65	2.00	1.25
60	1.60	1.20
55	1.25	1.00
50	0.90	0.80
45	0.60	0.55
40	0.40	0.35

A = Boom length
B = Working radius
C = Jib length
D = Jib offset
E = Boom angle

View thousands of Crane Specifications on FreeCraneSpecs.com

(2)

Unit : ton

· Outriggers middle extended (360°)
· Outriggers fully extended (Over front)

A / B (m)	9.8 m	13.3 m	16.9 m	20.4 m	23.9 m	27.5m	31 m
3.0	20.00	17.50	14.50	9.50			
3.5	17.80	17.50	14.50	9.50			
4.0	15.70	15.40	14.50	9.50	7.50	6.50	
4.5	13.70	13.35	13.15	9.50	7.50	6.50	
5.0	10.50	10.25	10.05	9.50	7.50	6.50	6.00
6.0	6.85	6.65	6.50	7.00	7.30	6.50	6.00
7.0	4.85	4.65	4.50	4.95	5.25	5.40	5.55
8.0	3.55	3.40	3.25	3.70	3.90	4.10	4.20
9.0		2.50	2.40	2.80	3.00	3.15	3.30
10.0		1.85	1.75	2.10	2.35	2.50	2.60
12.0			0.90	1.20	1.40	1.55	1.65
14.0				0.60	0.80	0.95	1.05
15.0					0.60	0.70	0.80

C / D / E (°)	8.0 m	
	5°	30°
80	2.75	1.35
77	2.75	1.35
75	2.25	1.35
70	1.25	1.00
65	0.60	0.50

A = Boom length
B = Working radius
C = Jib length
D = Jib offset
E = Boom angle

NOTES:

1. The total rated loads shown are for the case when the outriggers are set horizontally on firm ground. The values are based on the crane strength.
2. The weights of the slings and hooks (main winch hook: 230kg, auxiliary winch hook: 60kg) are included in the total rated loads shown.
3. The total rated load is based on the actual working radius including the deflection of the boom.
4. The chart below shows the standard number of part lines for each boom length. The load per line should not exceed 2.9t for the main winch and 3.0t for the auxiliary winch.

A	9.8 m	13.3 m	16.9 m	20.4 m	23.9 m	27.5 m	31 m	J
H	7	7	7	4	4	4	4	1

A = Boom length H = No. of part-line J = Jib / Single top

5. As a rule, free-fall operations should be performed only when lowering the hook alone. If a hoisted load must be lowered by free-fall operation, the load must be kept below 1/5th of the total rated load (the load per line must be 0.6t or less) and sudden braking operations must be avoided.
6. The total rated loads for the single top are obtained by subtracting the corresponding values below from the total rated load of the boom and must not exceed 3.0t.

A	9.8 m	13.3 m	16.9 m	20.4 m	23.9 m	27.5 m	31 m
Q	0kg	50kg	50kg	150kg	150kg	200kg	200kg

A = Boom length Q = Subtracted load

View thousands of Crane Specifications on FreeCraneSpecs.com

WORKING RADIUS - LIFTING HEIGHT

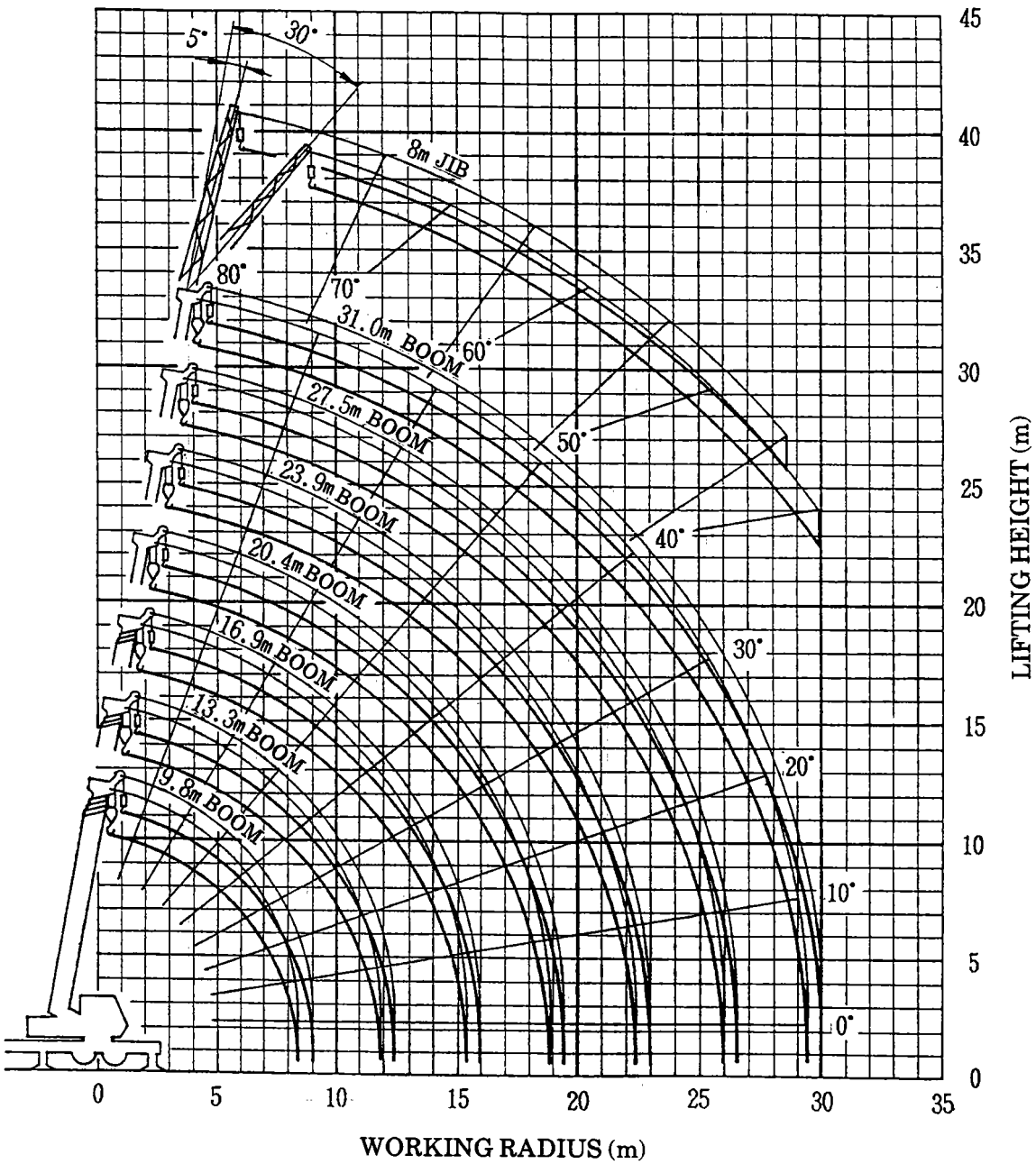

NOTES:

1. The deflection of the boom is not incorporated in the figure above.
2. The above chart is for the case where the outriggers are fully extended and where the front jack are used (over 360°).

View thousands of Crane Specifications on FreeCraneSpecs.com

DIMENSIONS (1/100)

P-KW31M

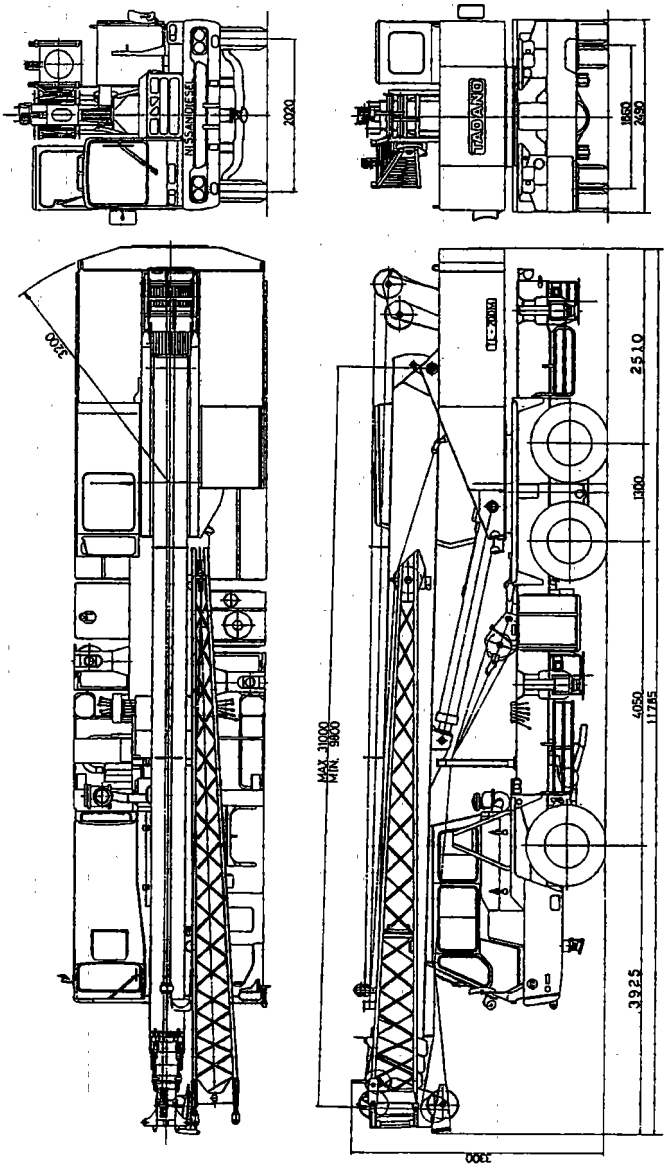

View thousands of Crane Specifications on FreeCraneSpecs.com

DIMENSIONS (1/100)

P-K203

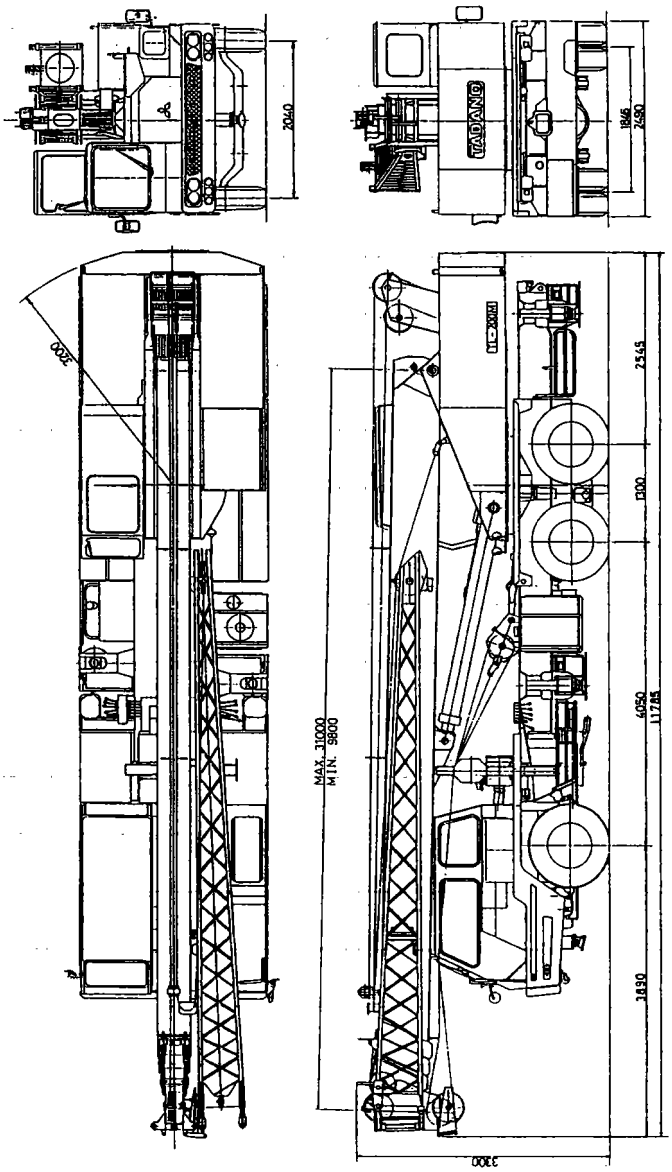

View thousands of Crane Specifications on FreeCraneSpecs.com

◆ MEMO ◆