View thousands of Crane Specifications on FreeCraneSpecs.com

TADANO

ATF130G-5

160.0 Ton Capacity (145 Metric Tons)

ALL TERRAIN CRANE

DIMENSIONS

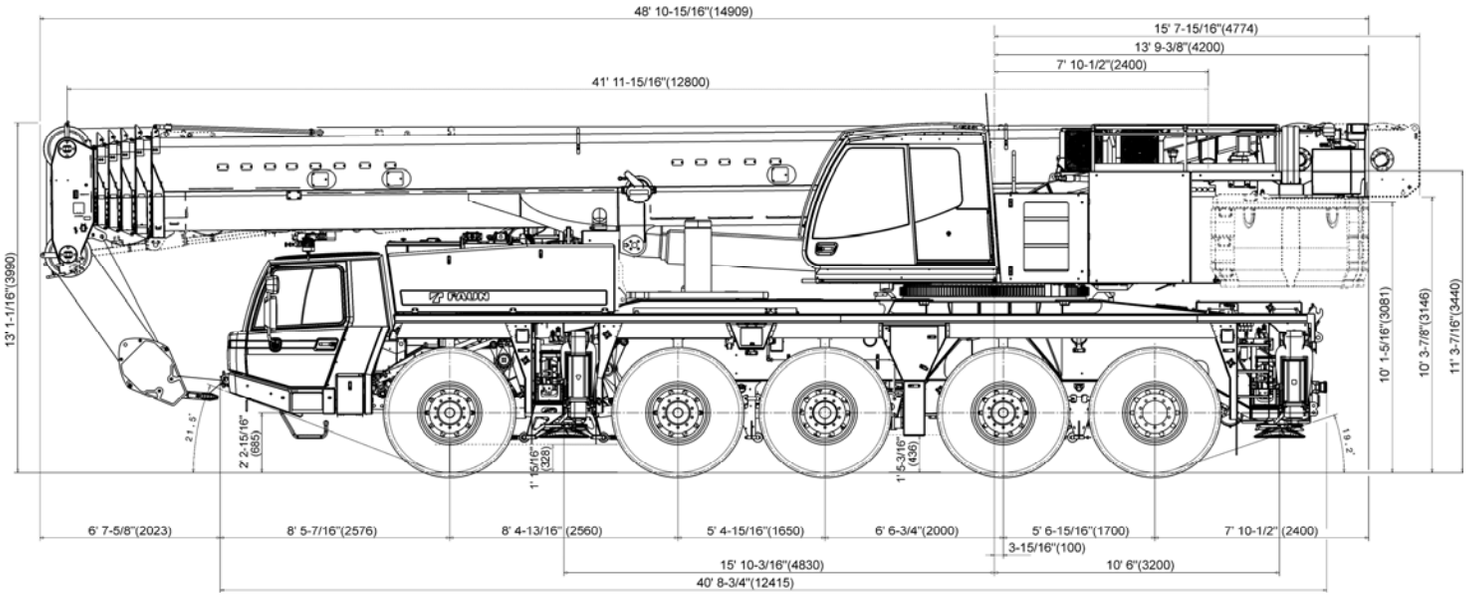

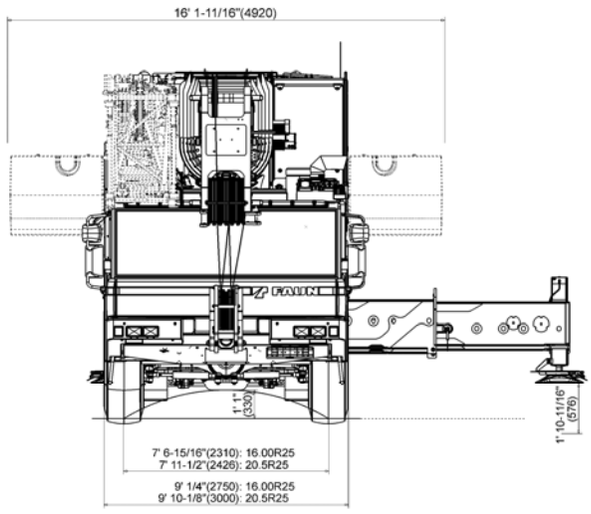

TURNING RADIUS

Steering	All wheel
Carrier inside	18' 9/16" (5.50m)
Over carrier	35' 8-3/8" (10.88m)
Over boom	38' 4-5/8" (11.70m)
Over boom extension	40' 4-5/8" (12.30m)

Specifications are subject to change without notice.

View thousands of Crane Specifications on FreeCraneSpecs.com

1. CRANE CARRIER

1.1 FRAME
FAUN purpose built, 5 axle, box type, torsion resistant, welded construction made of high tensile steel with integrated outrigger housings. Equipped with front and rear fenders, front and rear towing and tie-down lugs and access ladders.

1.2 OUTRIGGERS
Four point, fully hydraulic, horizontal and vertical motions controlled by electro-magnetic valves. Push button controls with level gauges from both sides of the carrier and from superstructure cab. Vertical cylinders with integral holding valves. Large sized floats can be stored on vertical cylinders or on carrier for road travel.
Outrigger base: length 26' 2-15/16" (8.00m), width 24' 7-1/4" (7.50m)
Mid. extension 16' 4-7/8" (5.00m)
Outrigger floats 1' 9-5/16" (542mm) x 1' 9-5/16" (542mm)

1.3 CARRIER ENGINE
Mercedes Benz 8 cylinder water cooled diesel engine, model OM 502 LA (Euromot IIIA /EPA Tier 3), with hydrostatically driven fan and thermostatically controlled cooler.
Displacement 972 in^3 (15,928 cc), Rating 530 hp (390 kW) at 1,800 rpm
Torque 1,770 ft-lbs (2,400 Nm) at 1,300 rpm.

1.4 TRANSMISSION
ZF AS-Tronic 12AS2302 mechanical transmission with integrated intarder.
Fully automatic gear control. 12 forward speeds and 2 reverse gears.
Gear ratios Forward: 12.33 / 9.59 / 7.44 / 5.78 / 4.57 / 3.55 / 2.70
2.10 / 1.63 / 1.27 / 1.00 / 0.78
Reverse: 11.41 / 8.88

1.5 TRANSFER CASE
Two stage transfer case, type VG3750, is flange mounted to 4th axle.
Gear ratios: on road 0.8 / off road 1.836

1.6 DRIVE
10×6: for on road: 2nd, 4th and 5th axles are driven
for off road: Inter-axle and inter-wheel differentials locked.
10x8: (OPTIONAL) : 1st, 2nd, 4th and 5th axles are driven

1.7 AXLES
1st axle : steered, non driven
(OPTION) steered, driven with Inter-wheel lock
reduction : 9.24
2nd axle steered, driven with inter-wheel lock
reduction : 9.24
with lockable inter-axle differential
3rd axle : steered, non driven
4th axle : steered, driven with inter-wheel lock
reduction : 9.24
with lockable inter-axle differential
5th axle : steered, driven with inter-wheel lock
reduction : 9.24
All steering knuckle bearings designed for minimum maintenance (yearly inspection).

1.8 SUSPENSION
Hydro-pneumatic, lockable with level adjustment. All axles have longitudinal and transverse trailing arms. With leveling adjustment and locked cylinders, the chassis can be tilted laterally and longitudinally from the control panel in the carrier cab or from the outrigger control boxes, which adjust the stroke of each individual suspension cylinder.
Cylinder stroke: +6-5/16" (+160mm), -4-5/16" (-110mm)

1.9 BRAKE SYSTEM
Service : Disk brake type, Dual circuit compressed air system with air drier.
Parking : Spring loaded type, acting on 3rd, 4th and 5th axles.
Auxiliary Intarder/Bremsomat function ,engine exhaust brake and constant throttle engine brake system.

1.10 WHEELS
(10) 17.00-25 steel disc wheels with 20.5R25 (525/80R25) on / off-road profile tires and mud flaps.

1.11 STEERING SYSTEM
ZF Servocom dual circuit hydraulic steering. Mechanical steering of front two axles with hydraulic booster.
An emergency steering pump is flange mounted to the transfer case.
In on road mode at speeds up to 15.5 mph(25 km/h), 3rd, 4th and 5th axles are steered electronically along with the front two axles. When exceeding 15.5 mph(25 km/h), 3rd and 4th axle is locked in centered position. When exceeding 31.1 mph(50 km/h), 5th axle is locked in centered position.
In off road mode, four steering modes are available in 10 wheel coordinated, 10 wheel crab manual steering of the rear three axles and automatic steering of the rear three axles.

1.12 POWER TRAIN
Drive shafts with cross geared flanges designed for minimum maintenance. Centralized lubrication system.

1.13 FUEL TANK CAPACITY
132 gal(500 l) capacity with One-Key System, lockable fuel cap.

1.14 CARRIER CAB
Two man full width cab of composite structure (steel sheet metal and fiber glass), windshield of laminated safety glass with windshield wiper and washer, sliding side windows of hardened glass. Driver and co-driver seats adjustable and air-suspended with integrated 3 point safety belts and headrests. 2 rear-view mirrors (electrically adjustable), 1 wide angle mirror and additional curb mirror, all mirrors heated. Radio with CD player.
Engine dependent warm water heater with defroster nozzles for windshield and cab floor.
Instrumentation includes speedometer, odometer, rpm counter with hour meter, fuel level gauge, warning light for engine temperature, CMV color display for further warning signals and operating functions, malfunction and diagnosis via the transmission display.
Control panel for electronic rear axle steering.
Air conditioning(OPTIONAL)

1.15 ELECTRICAL SYSTEM
24 volt DC system with 100 ampere 3-phase generator, and two 12 volt 170 Ah batteries.
Front lighting includes 2 low beam head lights, 2 high beam head lights, 2 directional indicators, 2 fog lights.
Rear lighting includes 2 rear combination panels each with directional indicator, brake light, fog light, reversing light and license plate light.
Side lighting includes 2 front directional indicators and reflectors on carrier.
Other equipment includes hazard warning lights, cab light, instrument panel light, signal horn and amber rotating beacon on cab roof and 4 working lights for outrigger extension area.
CAN Bus system with Faun CSS integrated self-diagnosis system.
Lighting according to EEC regulations.

1.16 TOOLS AND ACCESSORIES
Special tool set, hazard warning light, hazard warning triangle, fire extinguisher and first aid kit.

1.17 PAINTING
Standard TADANO colors

View thousands of Crane Specifications on FreeCraneSpecs.com

1.18 DIMENSIONS

Overall width : 9' 10-1/8" (3.00m) with 20.5R25 tires (std)
9' 1/4" (2.75m) with 16.00R25 tires (opt)
Overall height : 13' 1-1/16"(3.99m) with 20.5R25 or 16.00 tires in travel condition. The overall height can be adjusted by +6-5/16" (+160mm), -4-5/16" (-110mm)
Overall length : 48' 10-15/16" (14.909m)
Carrier length : 40' 8-3/4" (12.415m)
Wheel base : 8' 4-13/16" + 5' 4-15/16" + 6' 6-3/4" + 5' 6-15/16" (2.56m + 1.65m + 2.00m + 1.7m)
Track: 7' 11-1/2" (2.426m) with 20.5R25 tires (std)
7' 6-15/16" (2.310m) with 16.00R25 tires (opt)

1.19 TRAVEL PERFORMANCE (according to DIN 70020)

Max. travel speed : 52.8 mph(85 km/h)
Min. travel speed at 800 rpm : 0.6 mph with the clutch closed
Max. gradeability : 69 %

Tires 16.00/20.5R25, Total GVW 132,275 lbs				
Gear	Travel speeds (mph) * max. engine revs		Gradeability (%)	
	off-road	on-road	off-road	on-road
1st	1.9	3.7	69	46
2nd	1.9	5.0	69	34
3rd	2.5	6.2	69	26
4th	3.7	8.1	51	19
5th	4.3	9.9	38	15
6th	5.6	13.0	29	11
7th	7.5	16.8	21	8
8th	9.3	21.7	16	6
9th	12.4	28.0	12	5
10th	15.5	36.0	9	3
11th	19.9	46.0	7	2
12th	25.5	52.8	5	1
1st reverse	1.9	3.7	69	42
2nd reverse	2.5	5.0	69	31

The gradeability is based on theoretical values and depends on ground conditions and the coefficient of friction.

1.20 CARRIER OPTIONAL EQUIPMENT

1. 10 x 8 drive
2. ABS
3. Tyres 14.00 R25 - cattier width 9' 1/4" (2.75m)
4. Tyres 16.00 R25 - carrier width 9' 1/4" (2.75m)
5. Spare wheel 16.00 R25 (no bracket)
6. Spare wheel bracket
7. Spare rim for 20.5 R25 tyre (painted)
8. Spare rim for 16.00 R25 tyre (painted)
9. Towing attachment D-value 190kN with light and brake connection
10. Towing attachment D-value 260kN with light and brake connection
11. Towing hook - rear
12. Air and electrical lines for rear bumper for dolly
13. Low air warning buzzer and light
14. Free swing and boom elevation circuits for boom dolly
15. Toolbox at rear
16. Toolbox with wood storage at rear
17. Battery re-charge and remote start connections
18. Additional independent heater with engine pre-heat(Thermo 90ST)
19. Air conditioning (in carrier cab)
20. Reversing video camera
21. Reversing alarm
22. Sleeping bed
23. Cool box (in carrier cab)
24. Emergency (engine) stop switch
25. AMOT-control (Automatic engine shut-off system)
26. 10m cable for battery connection
27. Additional fire extinguisher (4.4lbs - 2.0kg) including support
28. Compliance to Canada regulation (CMVSS)
29. Compliance to USA regulation

2. SUPERSTRUCTURE

2.1 SUPERSTRUCTURE FRAME

Torsion resistant, all welded structure of high tensile steel. Connected to carrier by single race ball bearing slewing ring with external gearing providing 360°continuous rotation. Central lubrication system for ball bearing slewing ring, boom elevation cylinder, boom pivot and winch.

2. 2 CRANE ENGINE

Mercedes Benz 6 cylinder water cooled diesel engine, model OM 904 LA(Euromot IIIA /EPA Tier 3) with stepless control of engine rpm by foot pedal.
Displacement 259 in^3 (4,150 cc) , Rating 175 hp (129 kW) at 2,200 rpm
Torque 498 ft-lbf (675 Nm) at 1,200-1,600 rpm
Fuel tank capacity : 58.1 gal (220 l)

2. 3 HYDRAULIC SYSTEM

Three circuit diesel hydraulic system with oil cooler and 1 power controlled axial piston double pump (electronically adjustable) and 1 axial piston pump for slewing and 2 gear pumps for pilot controls and boom locking mechanism.

2.4 HYDRAULIC CONTROLS

Two joy stick levers with 4 three-way electrically operated valves for independent simultaneous operation of all crane motions with infinite speed control.

2.5 TELESCOPIC BOOM

Six section box type construction of high tensile steel, consisting of 1 base section and 5 telescopic sections.
The boom is extended by means of 1 double acting single stage hydraulic cylinder.
All boom telescope sections can be extended and retracted fully automatically and locked in the selected working position.
All telescope sections are extendable under partial load.
Total retracted length : 41' 11-15/16" (12.8m)
Total extended length : 196' 10-3/16" (60.0m)
Max. sheave height : 206' 8-5/16" (63.0m)
Telescoping speed out : 380 sec.

2.6 BOOM EXTENSION

12.5ft (3.8m), 33.5ft (10.2m) and 59.1ft (18.0m) double folding swing around type boom extension offsetable at 0°/20°/40°.
2 intermediate section(23.0ft each), increase the boom extension length to 105.0ft (32.0m).
Equipped with anti-two block system.

2.7 AUXILIARY LIFTING SHEAVE (SINGLE TOP) - OPTIONAL

Single sheave mounted to main boom head for single line operation (stowable). Equipped with anti-two block system .

2.8 BOOM HOIST

1 double acting hydraulic cylinder with integral holding valve.
Boom elevation : -1° to $+84^o$
Boom elevation speed : 84 sec. normal speed
42 sec. high speed (only derricking up)

View thousands of Crane Specifications on FreeCraneSpecs.com

2.9 MAIN WINCH

Axial piston constant displacement motor, grooved hoist drum with integral planetary gear, automatic hydraulically controlled spring loaded multiple disc brake and integral free wheeling (no sagging of load by hoisting).
Winch drive assembly connected to open hydraulic system.
Wire rope with "Superstop" easy reeving.
Lower limit switch and drum turn indicator.

Drum diameter :	20.67" (525 mm)
Rope diameter :	0.83" (21 mm)
Rope length :	820.2' (250 m)
Max. line pull :	19,109 lbf (85 kN)
Max. line speed :	426.5 ft/min (130 m/min)

2.10 AUXILIARY WINCH - OPTIONAL

Axial piston constant displacement motor, grooved hoist drum with integral planetary gear, automatic hydraulically controlled spring loaded multiple disc brake and integral free wheeling (no sagging of load by hoisting). Winch drive assembly connected to open hydraulic system. Wire rope with "Superstop" easy reeving. Lower limit switch and drum turn indicator.

Drum diameter :	20.67" (525 mm)
Rope diameter :	0.83" (21 mm)
Rope length :	820.2' (250 m)
Max. line pull :	19,109 lbf (85 kN)
Max. line speed :	249.3 ft/min (76 m/min)

2.11 SLEWING GEAR

Constant displacement motor with three stage planetary gear, foot actuated service or automatic brake and a parking brake.
Slewing speed infinitely variable: 0 - 1.6 rpm

2.12 COUNTERWEIGHT

Total 92,593 lb divisible counterweight,assembled and disassembled by hydraulic cylinders controlled from crane cab.
Tail swing : 15.75' (4.8m)

2.13 SUPERSTRUCTURE CAB

Spacious and ergonomic panoramic cab with sliding door and extra large tinted glass windows, electrically controlled fold out front window with windshield washer and wiper, fixed cab roof window with armoured glass and fold out rear cab window, sun visor, cab light, 20° tiltable cockpit, adjustable hydraulically cushioned seat with headrest, signal horn, radio with CD player, and connection for wireless (12 volt).
Engine independent hot water heater with defroster nozzles for windshield and cab floor (Webasto Thermo 50).
Ergonomically positioned control elements and instrumentation for crane operation including fuel level gauge, engine cooling temperature, hour meter and combined engine warning lamp.
Outrigger and chassis engine functions control from superstructure cab.
One-key system for the both carrier and crane cabs.
Air conditioning(OPTIONAL)

2.14 ELECTRICAL SYSTEM

24 volt system with 80 A 3-phase alternator, 2 batteries each 12 V and 110 Ah, 1 rotating beacon on left hand side of main winch, 2 working lights on cab front flap and 2 side lights on boom head.

2.15 SAFETY DEVICES

Electronic load moment device (AML) with interpolation and automatic overload shut off, hoist limit switch with shut off, overload warning and load moment indicator. Digital display of boom angle, boom length, sheave height, working radius, hook load and further information.
Working area limitation for boom angle, sheave height and working radius with automatic shut off.
Lift Adjuster function, Anti-two block system, anemometer on the main boom head or on the jib head.
Safety valves against pipe and hose rupture, holding valves on hydraulic cylinders.

2.16 SUPERSTRUCTURE OPTIONAL EQUIPMENT

1. 11 ton headache ball
2. 27.5 ton hook block (1 sheave), single
3. 69.4 ton hook block (3 sheaves), single
4. 69.4 ton hook block (3 sheaves), double
5. 88.2 ton hook block (5 sheaves), single
6. 88.2 ton hook block (5 sheaves), double
7. 137.8 ton hook block (7 sheaves), double
8. Auxiliary winch
9. Compensating counterweight for Aux. winch
10. Auxiliary lifting sheave (Single Top)
11. Boom extension 12.5', 33.5' and 59.1' offsets $0^o/20^o/40^o$ incl. LMD program
12. Hyd. boom extension 12.5', 33.5' and 59.1' offsets 0°-40° incl. LMD program
13. 1 x 23.0' boom extension insert (for 82.0') incl. LMD program
14. 2 x 23.0' boom extension insert (for 105.0') incl. LMD program
15. Bracket welded only for subsequent installation of additional sheaves
16. LMD program for 27,558 lbs counterweight
17. LMD program for 47,178 lbs counterweight
18. Outrigger load display
19. Outrigger length indicator
20. Air conditioning
21. Electric fan
22. Winch drum mirror
23. Additional hydraulic oil cooler
24. 360 degree positive slew lock
25. External moment warning lamp (3 colors)
26. Hook block storage for 69.4 ton
27. Tool box at right hand side of superstructure
28. Spark arrester
29. Additional 1 Rotating beacon
30. 2 working lights on boom XENON type (adjustable from cab)
31. Aircraft warning light
32. Battery re-charge and remote start connection
33. Emergency (engine) stop switch
34. AMOT-control (automatic engine shut-off system)
35. Emergency (man basket) lowering controls
36. Additional stop function under -13^oF (-25^oC) ambient
37. Boom dolly bracket
38. Boom launching device
39. Preparation of boom launching device
40. Preparation of single top
41. Preparation/Plumbing of auxiliary winch
42. Additional manual 1 set O/M, P/C (std. 2 sets)
43. CD manual 1 set O/M, P/C
44. Special painting - 2 colors
45. Special painting - 3 colors
46. Special painting boom sections (std. black)
47. One each additional color for more than 4 colors

View thousands of Crane Specifications on FreeCraneSpecs.com

ATF 130G-5 WORKING RANGE CHART

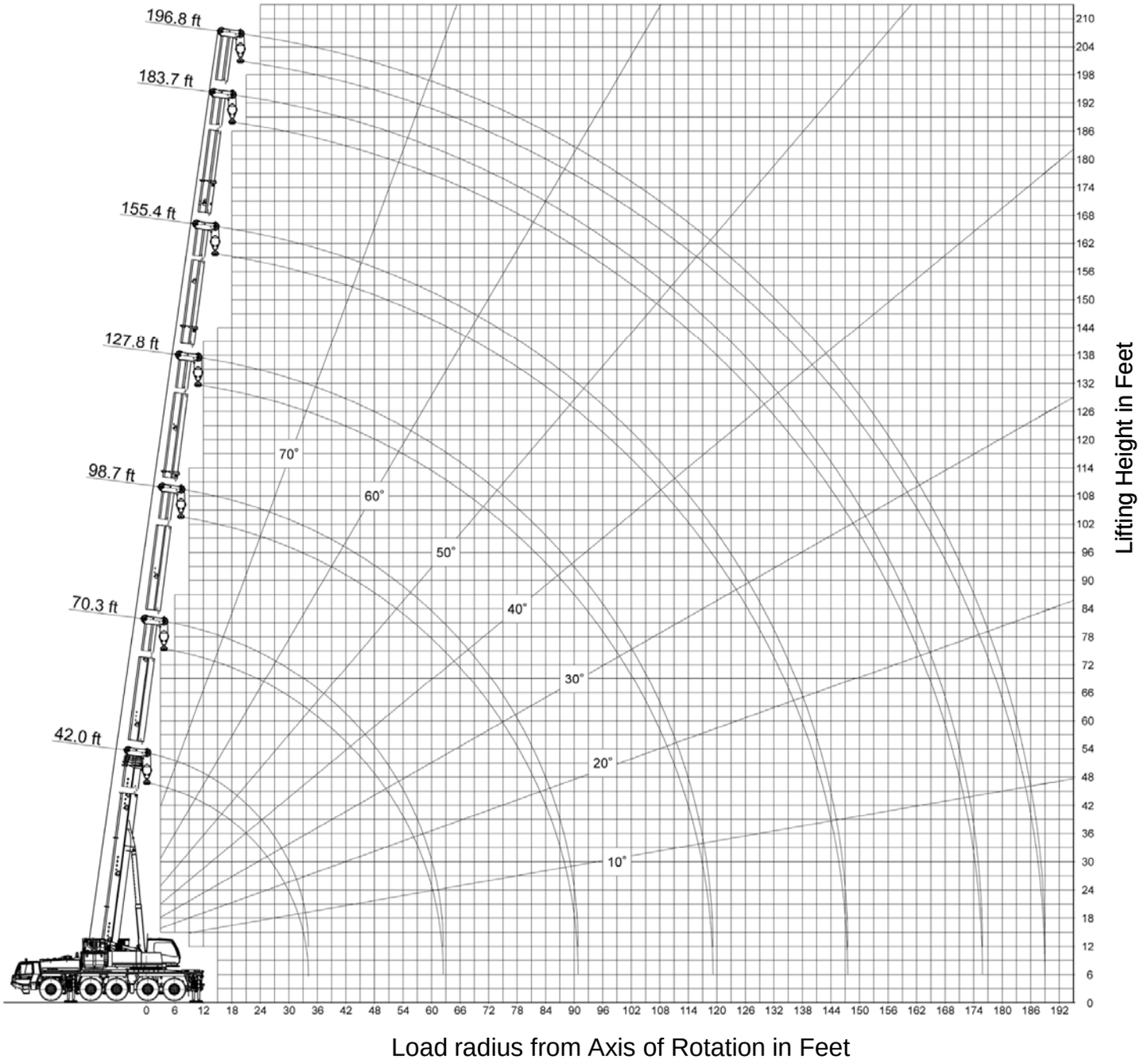

NOTE: Boom and jib geometry shown are for unloaded condition and machine standing level on firm supporting surface. Boom deflection and subsequent radius and boom angle change must be accounted for when applying load to hook.

View thousands of Crane Specifications on FreeCraneSpecs.com

ATF 130G-5 TADANO-Load rating chart

Counterweight 92,593lbs

Lifting capacities in 1,000 lbs according per SAE J765 on telescopic boom
On outriggers, 360° working area
Outriggers extended, outrigger base 24.61ft

Boom length [ft]

Working radius [ft]	42.0 ° ∠	42.0 1)	42.0	56.2 ° ∠	56.2	56.2 ° ∠	56.2	56.2 ° ∠	56.2	70.3 ° ∠	70.3	70.3 ° ∠	70.3	70.3 ° ∠	70.3	70.3 ° ∠	70.3	84.5 ° ∠	84.5	84.5 ° ∠	84.5	84.5 ° ∠	84.5	84.5 ° ∠	84.5	Working radius [ft]
8.0	71	320.0 *																								8.0
8.9	70	286.6 *																								8.9
9.8	69	245.2 *	230.8 *	75	198.4	75	194.0	75	102.7	79	198.4	79	188.9	79	102.7	79	77.8									9.8
11.5	66	219.8	211.0	73	198.4	73	185.2	73	99.6	77	198.4	77	177.0	77	102.7	77	72.8	79	154.3	79	110.2	79	102.7	79	76.7	11.5
13.1	64	201.5	194.2	71	194.0	71	174.2	71	94.4	76	193.1	76	166.7	76	101.4	76	68.3	78	154.3	78	110.2	78	102.7	78	72.8	13.1
14.8	61	183.6	179.7	70	179.5	70	164.2	70	89.7	74	178.6	74	157.4	74	97.0	74	64.6	77	154.3	77	110.2	77	100.8	77	68.6	14.8
16.4	59	167.1	167.1	68	166.9	68	155.6	68	85.5	73	166.0	73	149.0	73	92.8	73	61.1	76	154.3	76	110.2	76	97.0	76	64.8	16.4
19.7	53	146.2	145.9	64	145.7	64	140.7	64	78.3	70	144.6	70	134.9	70	84.9	70	55.1	74	145.5	74	110.2	74	90.4	74	58.4	19.7
23.0	47	129.6	128.1	60	127.9	60	128.5	60	72.3	67	126.8	67	123.0	67	77.4	67	50.0	72	128.1	72	102.7	72	82.2	72	53.1	23.0
26.2	40	116.2	112.9	56	112.4	56	113.8	56	67.2	64	111.3	64	113.3	64	71.2	64	46.1	69	112.7	69	95.2	69	75.6	69	48.7	26.2
29.5	31	105.2	100.1	52	99.6	52	101.0	52	62.8	61	98.5	61	101.0	61	65.9	61	42.3	67	99.9	67	88.6	67	69.9	67	45.0	29.5
32.8	19	92.8	89.5	47	89.1	47	90.4	47	59.3	58	88.0	58	90.4	58	61.3	58	38.8	64	89.3	64	83.1	64	65.0	64	41.9	32.8
36.1				42	80.2	42	81.6	42	56.0	55	79.1	55	81.6	55	57.3	55	35.9	62	80.5	62	78.0	62	60.8	62	39.0	36.1
39.4				36	72.8	36	74.1	36	53.4	51	71.6	51	74.1	51	54.0	51	33.3	59	73.0	59	73.9	59	57.1	59	36.6	39.4
45.9				20	60.8	20	62.2	20	49.6	44	59.3	44	61.9	44	48.3	44	29.1	53	60.6	53	63.3	53	50.7	53	32.6	45.9
52.5										34	48.1	34	50.5	34	43.9	34	26.0	47	49.2	47	51.8	47	45.9	47	29.3	52.5
59.1										21	41.7	21	43.7	21	40.6	21	23.4	41	41.0	41	43.4	41	41.7	41	26.7	59.1
65.6																		33	35.5	33	38.1	33	38.4	33	24.5	65.6
72.2																		22	31.3	22	34.0	22	35.3	22	22.9	72.2
78.7																										78.7
85.3																										85.3
91.9																										91.9
98.4																										98.4
105.0																										105.0
111.5																										111.5
118.1																										118.1
124.7																										124.7
131.2																										131.2
137.8																										137.8
144.4																										144.4
150.9																										150.9
157.5																										157.5
164.0																										164.0
170.6																										170.6
177.2																										177.2
183.7																										183.7
Telescoping sequence [%]																										
Tel. 1	0			0		0		0		46		0		0		0		46		0		0		0		Tel. 1
Tel. 2	0			46		0		0		46		46		0		0		46		46		0		0		Tel. 2
Tel. 3	0			0		46		0		0		46		0		0		46		46		46		0		Tel. 3
Tel. 4	0			0		0		0		0		0		46		0		0		46		46		46		Tel. 4
Tel. 5	0			0		0		46		0		0		46		92		0		0		46		92		Tel. 5

1) Over rear with superstructure locking pin engaged
* With additional lifting equipment

Counterweight 92,593lbs

Lifting capacities in 1,000 lbs according per SAE J765 on telescopic boom
On outriggers, 360° working area
Outriggers extended, outrigger base 24.61ft

Boom length [ft]

Working radius [ft]	98.7 ° ∠	98.7	98.7	98.7 ° ∠	98.7	98.7 ° ∠	98.7	98.7 ° ∠	98.7	112.9 ° ∠	112.9	112.9 ° ∠	112.9	112.9 ° ∠	112.9	112.9 ° ∠	112.9	127.0 ° ∠	127.0	127.0 ° ∠	127.0	127.0 ° ∠	127.0	141.2 ° ∠	141.2	141.2 ° ∠	141.2	141.2 ° ∠	141.2	Working radius [ft]
8.0																														8.0
8.9																														8.9
9.8																														9.8
11.5																														11.5
13.1																														13.1
14.8	80		119.7	80	110.2	80	93.5	80	58.9																					14.8
16.4	79		113.1	79	110.2	79	93.5	79	56.4	80	97.0	80	83.8	80	65.0	80	55.6													16.4
19.7	77		101.6	77	110.2	77	93.5	77	51.4	79	93.3	79	83.8	79	63.5	79	52.0	80	72.3	80	60.4	80	45.2							19.7
23.0	75		92.2	75	108.7	75	87.3	75	46.7	77	84.7	77	83.8	77	59.1	77	48.7	79	72.3	79	59.5	79	45.2	80	59.7	80	50.9	80	45.6	80	41.9	23.0
26.2	73		84.2	73	101.4	73	80.9	73	42.8	75	77.6	75	83.8	75	54.9	75	45.2	77	72.3	77	56.7	77	44.3	79	59.7	79	50.9	79	45.4	79	41.9	26.2
29.5	71		77.6	71	95.0	71	75.4	71	39.2	74	71.4	74	78.9	74	51.4	74	42.1	76	66.8	76	54.0	76	40.8	78	59.7	78	50.9	78	43.2	78	41.4	29.5
32.8	69		71.9	69	89.5	69	70.5	69	36.4	72	66.1	72	74.3	72	48.3	72	39.2	75	61.9	75	51.1	75	37.9	76	58.4	76	50.9	76	41.2	76	39.5	32.8
36.1	67		66.8	67	82.0	67	66.1	67	33.7	70	61.5	70	70.1	70	45.4	70	36.6	73	57.8	73	48.3	73	35.3	75	54.5	75	49.2	75	39.5	75	37.3	36.1
39.4	64		62.4	64	74.5	64	62.4	64	31.3	68	57.3	68	66.4	68	43.0	68	34.4	72	54.0	72	45.9	72	32.8	74	50.9	74	47.2	74	37.7	74	34.8	39.4
45.9	60		54.9	60	62.4	60	56.0	60	27.1	65	50.7	65	60.0	65	38.6	65	30.9	69	47.6	69	41.4	69	29.1	71	45.0	71	43.2	71	34.6	71	31.1	45.9
52.5	55		48.3	55	50.7	55	50.9	55	24.0	61	45.2	61	52.7	61	35.3	61	27.6	65	42.5	65	37.9	65	26.0	68	40.1	68	39.7	68	31.7	68	28.0	52.5
59.1	50		39.9	50	42.3	50	45.4	50	21.4	57	40.8	57	44.1	57	32.4	57	24.7	62	38.4	62	35.1	62	23.4	66	36.2	66	36.8	66	29.1	66	25.4	59.1
65.6	45		34.2	45	35.9	45	38.8	45	19.2	53	34.8	53	37.5	53	30.0	53	22.5	58	34.8	58	32.4	58	21.2	63	32.8	63	33.5	63	26.9	63	23.1	65.6
72.2	39		29.8	39	32.0	39	34.4	39	17.4	48	30.6	48	33.1	48	27.8	48	20.5	55	31.1	55	30.2	55	19.4	59	29.5	59	30.6	59	24.9	59	21.4	72.2
78.7	31		26.0	31	28.2	31	30.6	31	15.9	43	26.9	43	29.3	43	26.0	43	18.7	51	26.9	51	28.4	51	17.6	56	26.9	56	28.0	56	23.4	56	19.6	78.7
85.3	22		22.5	22	25.1	22	27.3	22	14.8	38	23.6	38	26.0	38	24.7	38	17.4	47	24.0	47	26.2	47	16.1	53	24.3	53	25.4	53	21.6	53	18.3	85.3
91.9										31	20.7	31	23.4	31	23.4	31	16.1	42	21.6	42	24.0	42	15.0	49	21.8	49	22.9	49	20.1	49	16.8	91.9
98.4										23	18.5	23	20.9	23	22.3	23	15.0	37	19.2	37	21.6	37	13.7	45	19.4	45	20.5	45	18.7	45	15.7	98.4
105.0																		31	17.2	31	19.4	31	12.8	41	17.4	41	18.5	41	17.6	41	14.6	105.0
111.5																		24	15.4	24	17.6	24	11.9	36	15.7	36	16.8	36	16.5	36	13.7	111.5
118.1																								31	13.7	31	15.0	31	15.7	31	12.8	118.1
124.7																								24	12.3	24	13.7	24	14.6	24	11.9	124.7
131.2																								14	11.0	14	12.3	14	13.7	14	11.2	131.2
137.8																																137.8
144.4																																144.4
150.9																																150.9
157.5																																157.5
164.0																																164.0
170.6																																170.6
177.2																																177.2
183.7																																183.7
Telescoping sequence [%]																																
Tel. 1	92			46		0		0		92		46		0		0		92		46		0		92		92		46		0		Tel. 1
Tel. 2	46			46		46		0		46		46		46		0		46		46		0		92		46		46		46		Tel. 2
Tel. 3	46			46		46		0		46		46		46		46		46		46		92		46		46		46		92		Tel. 3
Tel. 4	0			46		46		92		46		46		46		92		46		46		92		46		46		92		92		Tel. 4
Tel. 5	0			0		46		92		0		46		92		92		46		92		92		46		92		92		92		Tel. 5

View thousands of Crane Specifications on FreeCraneSpecs.com

ATF 130G-5 TADANO-Load rating chart

Counterweight 92,593lbs

Lifting capacities in 1,000 lbs according per SAE J765 on telescopic boom
On outriggers, 360° working area
Outriggers extended, outrigger base 24.61ft

Working radius [ft]	Boom length [ft] 155.4							169.6				183.7		196.8		Working radius [ft]
	° ∠			° ∠		° ∠		° ∠		° ∠		° ∠		° ∠		
8.0																8.0
8.9																8.9
9.8																9.8
11.5																11.5
13.1																13.1
14.8																14.8
16.4																16.4
19.7																19.7
23.0																23.0
26.2	80		47.2	80	41.0	80	34.6									26.2
29.5	79		47.2	79	41.0	79	34.6	80	36.6	80	31.5					29.5
32.8	78		47.2	78	41.0	78	34.6	79	36.6	79	31.5	80	29.1			32.8
36.1	77		47.2	77	41.0	77	34.6	78	36.6	78	31.5	79	29.1	80	23.4	36.1
39.4	76		47.0	76	40.8	76	34.6	77	36.6	77	31.5	78	29.1	79	23.4	39.4
45.9	73		42.3	73	36.8	73	32.4	75	36.6	75	31.5	77	29.1	78	23.4	45.9
52.5	71		38.4	71	33.5	71	29.3	73	34.8	73	30.2	75	29.1	76	23.4	52.5
59.1	69		34.6	69	30.6	69	26.7	71	32.0	71	27.8	73	28.2	74	23.4	59.1
65.6	66		31.1	66	28.2	66	24.5	69	29.8	69	25.6	71	26.5	73	23.1	65.6
72.2	63		28.0	63	26.0	63	22.7	67	26.9	67	23.8	69	24.7	71	21.4	72.2
78.7	61		25.4	61	24.0	61	20.7	64	24.3	64	22.0	67	22.9	69	19.8	78.7
85.3	58		23.1	58	22.3	58	19.0	62	22.0	62	20.7	65	21.6	67	18.1	85.3
91.9	55		21.2	55	20.5	55	17.4	59	20.3	59	19.2	63	19.8	65	16.5	91.9
98.4	51		19.2	51	19.0	51	16.1	56	18.5	56	17.9	60	18.3	63	15.2	98.4
105.0	48		17.4	48	17.4	48	14.8	53	17.2	53	16.5	58	16.8	61	13.9	105.0
111.5	44		15.9	44	16.3	44	13.7	50	15.9	50	15.4	55	15.7	59	12.8	111.5
118.1	40		14.3	40	15.0	40	12.8	47	14.6	47	14.3	52	14.6	56	11.9	118.1
124.7	36		12.8	36	13.7	36	11.9	43	13.0	43	13.4	49	13.4	54	11.0	124.7
131.2	31		11.5	31	12.6	31	11.2	39	11.7	39	12.6	46	12.3	51	10.1	131.2
137.8	25		10.1	25	11.5	25	10.4	35	10.6	35	11.7	43	11.0	48	9.5	137.8
144.4	16		9.0	16	10.4	16	9.9	31	9.5	31	10.8	39	9.9	45	8.8	144.4
150.9								25	8.6	25	9.9	35	9.0	42	8.4	150.9
157.5								17	7.7	17	9.0	31	8.2	38	7.7	157.5
164.0												25	7.3	35	7.1	164.0
170.6												18	6.6	30	6.4	170.6
177.2														25	5.7	177.2
183.7														18	5.3	183.7
Telescoping sequence [%]																
Tel. 1	92			46		0		92		46		92		100		Tel. 1
Tel. 2	92			92		92		92		92		92		100		Tel. 2
Tel. 3	92			92		92		92		92		92		100		Tel. 3
Tel. 4	46			92		92		92		92		92		100		Tel. 4
Tel. 5	46			46		92		46		92		92		100		Tel. 5

Counterweight 69,224lbs

Lifting capacities in 1,000 lbs according per SAE J765 on telescopic boom
On outriggers, 360° working area
Outriggers extended, outrigger base 24.61ft

Working radius [ft]	Boom length [ft] 42.0			56.2						70.3								84.5								Working radius [ft]
	° ∠	1)		° ∠		° ∠		° ∠		° ∠		° ∠		° ∠		° ∠		° ∠		° ∠		° ∠		° ∠		
8.9	70	286.6 *																								8.9
9.8	69	238.8 *	228.8 *	75	198.4	75	194.0	75	102.7	79	198.4	79	188.9	79	102.7	79	77.8									9.8
11.5	66	216.3	209.0	73	198.4	73	185.2	73	99.6	77	198.4	77	177.0	77	102.7	77	72.8	79	154.3	79	110.2	79	102.7	79	76.7	11.5
13.1	64	196.7	192.5	71	192.2	71	174.2	71	94.4	76	191.4	76	166.7	76	101.4	76	68.3	78	154.3	78	110.2	78	102.7	78	72.8	13.1
14.8	61	180.8	178.1	70	177.7	70	164.2	70	89.7	74	177.0	74	157.4	74	97.0	74	64.6	77	154.3	77	110.2	77	100.8	77	68.6	14.8
16.4	59	165.6	165.1	68	164.9	68	155.6	68	85.5	73	163.8	73	149.0	73	92.8	73	61.1	76	154.3	76	110.2	76	97.0	76	64.8	16.4
19.7	53	144.8	142.2	64	142.0	64	140.7	64	78.3	70	140.7	70	134.9	70	84.9	70	55.1	74	142.2	74	110.2	74	90.4	74	58.4	19.7
23.0	47	128.5	122.8	60	122.4	60	123.5	60	72.3	67	121.3	67	123.0	67	77.4	67	50.0	72	122.6	72	102.7	72	82.2	72	53.1	23.0
26.2	40	115.1	107.4	56	106.9	56	108.0	56	67.2	64	105.8	64	108.2	64	71.2	64	46.1	69	107.1	69	95.2	69	75.6	69	48.7	26.2
29.5	31	103.4	95.0	52	94.4	52	95.7	52	62.8	61	93.3	61	95.9	61	65.9	61	42.3	67	94.6	67	88.6	67	69.9	67	45.0	29.5
32.8	19	86.9	84.9	47	84.2	47	85.3	47	59.3	58	82.9	58	85.5	58	61.3	58	38.8	64	84.4	64	83.1	64	65.0	64	41.9	32.8
36.1				42	73.6	42	75.2	42	56.0	55	72.1	55	75.2	55	57.3	55	35.9	62	73.9	62	76.7	62	60.8	62	39.0	36.1
39.4				36	63.9	36	65.3	36	53.4	51	62.4	51	65.5	51	54.0	51	33.3	59	63.9	59	67.0	59	57.1	59	36.6	39.4
45.9				20	53.1	20	54.7	20	49.6	44	48.5	44	51.1	44	48.3	44	29.1	53	49.8	53	52.5	53	50.7	53	32.6	45.9
52.5										34	40.6	34	42.8	34	43.9	34	26.0	47	40.1	47	42.8	47	45.2	47	29.3	52.5
59.1										21	34.6	21	37.0	21	39.7	21	23.4	41	34.2	41	35.5	41	37.9	41	26.7	59.1
65.6																		33	29.3	33	31.1	33	33.3	33	24.5	65.6
72.2																		22	25.4	22	27.3	22	29.3	22	22.9	72.2
78.7																										78.7
85.3																										85.3
91.9																										91.9
98.4																										98.4
105.0																										105.0
111.5																										111.5
118.1																										118.1
124.7																										124.7
131.2																										131.2
137.8																										137.8
144.4																										144.4
150.9																										150.9
157.5																										157.5
164.0																										164.0
170.6																										170.6
177.2																										177.2
183.7																										183.7
Telescoping sequence [%]																										
Tel. 1	0			0		0		0		46		0		0		0		46		0		0		0		Tel. 1
Tel. 2	0			46		0		0		46		46		0		0		46		46		0		0		Tel. 2
Tel. 3	0			0		46		0		0		46		0		0		46		46		46		0		Tel. 3
Tel. 4	0			0		0		0		0		0		46		0		0		46		46		46		Tel. 4
Tel. 5	0			0		0		46		0		0		46		92		0		0		46		92		Tel. 5

1) Over rear with superstructure locking pin engaged
* With additional lifting equipment

View thousands of Crane Specifications on FreeCraneSpecs.com

ATF 130G-5 TADANO-Load rating chart

Counterweight 69,224lbs

Lifting capacities in 1,000 lbs according per SAE J765 on telescopic boom
On outriggers, 360° working area
Outriggers extended, outrigger base 24.61ft

Boom length [ft]

Working radius [ft]	98.7								112.9								127.0						141.2								Working radius [ft]
	° ∠			° ∠		° ∠		° ∠		° ∠		° ∠		° ∠		° ∠		° ∠		° ∠		° ∠		° ∠		° ∠		° ∠		° ∠	
8.9																															8.9
9.8																															9.8
11.5																															11.5
13.1																															13.1
14.8	80		119.7	80	110.2	80	93.5	80	58.9																						14.8
16.4	79		113.1	79	110.2	79	93.5	79	56.4	80	97.0	80	83.8	80	65.0	80	55.6														16.4
19.7	77		101.6	77	110.2	77	93.5	77	51.4	79	93.3	79	83.8	79	63.5	79	52.0	80	72.3	80	60.4	80	45.2								19.7
23.0	75		92.2	75	108.7	75	87.3	75	46.7	77	84.7	77	83.8	77	59.1	77	48.7	79	72.3	79	59.5	79	45.2	80	59.7	80	50.9	80	45.6	80	41.9	23.0
26.2	73		84.2	73	101.4	73	80.9	73	42.8	75	77.6	75	83.8	75	54.9	75	45.2	77	72.3	77	56.7	77	44.3	79	59.7	79	50.9	79	45.4	79	41.9	26.2
29.5	71		77.6	71	95.0	71	75.4	71	39.2	74	71.4	74	78.9	74	51.4	74	42.1	76	66.8	76	54.0	76	40.8	78	59.7	78	50.9	78	43.2	78	41.4	29.5
32.8	69		71.9	69	86.0	69	70.5	69	36.4	72	66.1	72	74.3	72	48.3	72	39.2	75	61.9	75	51.1	75	37.9	76	58.4	76	50.9	76	41.2	76	39.5	32.8
36.1	67		66.8	67	75.8	67	66.1	67	33.7	70	61.5	70	70.1	70	45.4	70	36.6	73	57.8	73	48.3	73	35.3	75	54.5	75	49.2	75	39.5	75	37.3	36.1
39.4	64		62.4	64	65.9	64	62.4	64	31.3	68	57.3	68	66.4	68	43.0	68	34.4	72	54.0	72	45.9	72	32.8	74	50.9	74	47.2	74	37.7	74	34.8	39.4
45.9	60		48.7	60	51.6	60	54.9	60	27.1	65	50.5	65	53.6	65	38.6	65	30.9	69	47.6	69	41.4	69	29.1	71	45.0	71	43.2	71	34.6	71	31.1	45.9
52.5	55		39.0	55	41.7	55	44.8	55	24.0	61	40.6	61	43.4	61	35.3	61	27.6	65	42.1	65	37.9	65	26.0	68	40.1	68	39.7	68	31.7	68	28.0	52.5
59.1	50		32.0	50	34.4	50	37.5	50	21.4	57	33.3	57	36.2	57	32.4	57	24.7	62	34.8	62	35.1	62	23.4	66	35.1	66	36.2	66	29.1	66	25.4	59.1
65.6	45		27.1	45	29.8	45	31.7	45	19.2	53	28.7	53	31.7	53	30.0	53	22.5	58	29.3	58	32.0	58	21.2	63	29.5	63	30.6	63	26.9	63	23.1	65.6
72.2	39		23.4	39	26.0	39	28.2	39	17.4	48	24.7	48	27.6	48	27.8	48	20.5	55	24.9	55	27.3	55	19.4	59	26.0	59	26.2	59	24.9	59	21.4	72.2
78.7	31		19.8	31	22.5	31	25.1	31	15.9	43	21.4	43	24.0	43	25.4	43	18.7	51	22.0	51	23.8	51	17.6	56	22.5	56	23.4	56	23.4	56	19.6	78.7
85.3	22		17.0	22	19.8	22	22.5	22	14.8	38	18.3	38	20.9	38	22.7	38	17.4	47	19.2	47	21.6	47	16.1	53	19.6	53	20.5	53	21.6	53	18.3	85.3
91.9										31	15.7	31	18.5	31	20.5	31	16.1	42	16.8	42	19.2	42	15.0	49	17.2	49	18.3	49	19.8	49	16.8	91.9
98.4										23	13.4	23	16.3	23	18.3	23	15.0	37	14.6	37	17.2	37	13.7	45	14.8	45	16.1	45	18.1	45	15.7	98.4
105.0																		31	12.6	31	15.4	31	12.8	41	12.8	41	14.3	41	16.3	41	14.6	105.0
111.5																		24	11.0	24	13.9	24	11.9	36	11.2	36	12.3	36	14.6	36	13.7	111.5
118.1																								31	9.7	31	11.0	31	12.8	31	12.8	118.1
124.7																								24	8.2	24	9.5	24	11.7	24	11.9	124.7
131.2																								14	7.1	14	8.6	14	10.4	14	11.2	131.2
137.8																																137.8
144.4																																144.4
150.9																																150.9
157.5																																157.5
164.0																																164.0
170.6																																170.6
177.2																																177.2
183.7																																183.7
Telescoping sequence [%]																															
Tel. 1	92			46		0		0		92		46		0		0		92		46		0		92		92		46		0	Tel. 1
Tel. 2	46			46		46		0		46		46		46		0		46		46		0		92		46		46		46	Tel. 2
Tel. 3	46			46		46		0		46		46		46		46		46		46		92		46		46		46		92	Tel. 3
Tel. 4	0			46		46		92		46		46		46		92		46		46		92		46		46		92		92	Tel. 4
Tel. 5	0			0		46		92		0		46		92		92		46		92		92		46		92		92		92	Tel. 5

Counterweight 69,224lbs

Lifting capacities in 1,000 lbs according per SAE J765 on telescopic boom
On outriggers, 360° working area
Outriggers extended, outrigger base 24.61ft

Boom length [ft]

Working radius [ft]	155.4							169.6				183.7		196.8		Working radius [ft]
	° ∠			° ∠		° ∠		° ∠		° ∠		° ∠		° ∠		
8.9																8.9
9.8																9.8
11.5																11.5
13.1																13.1
14.8																14.8
16.4																16.4
19.7																19.7
23.0																23.0
26.2	80		47.2	80	41.0	80	34.6									26.2
29.5	79		47.2	79	41.0	79	34.6	80	36.6	80	31.5					29.5
32.8	78		47.2	78	41.0	78	34.6	79	36.6	79	31.5	80	29.1			32.8
36.1	77		47.2	77	41.0	77	34.6	78	36.6	78	31.5	79	29.1	80	23.4	36.1
39.4	76		47.0	76	40.8	76	34.6	77	36.6	77	31.5	78	29.1	79	23.4	39.4
45.9	73		42.3	73	36.8	73	32.4	75	36.6	75	31.5	77	29.1	78	23.4	45.9
52.5	71		38.4	71	33.5	71	29.3	73	34.8	73	30.2	75	29.1	76	23.4	52.5
59.1	69		34.6	69	30.6	69	26.7	71	32.0	71	27.8	73	28.2	74	23.4	59.1
65.6	66		30.0	66	28.2	66	24.5	69	29.8	69	25.6	71	26.5	73	23.1	65.6
72.2	63		25.6	63	26.0	63	22.7	67	26.2	67	23.8	69	24.7	71	21.4	72.2
78.7	61		22.5	61	23.4	61	20.7	64	23.4	64	22.0	67	22.9	69	19.8	78.7
85.3	58		19.8	58	21.2	58	19.0	62	20.7	62	20.7	65	20.9	67	18.1	85.3
91.9	55		17.2	55	19.0	55	17.4	59	18.1	59	19.0	63	18.7	65	16.5	91.9
98.4	51		15.0	51	16.8	51	16.1	56	15.9	56	17.4	60	16.5	63	15.2	98.4
105.0	48		13.2	48	15.0	48	14.8	53	13.9	53	15.7	58	14.6	61	13.9	105.0
111.5	44		11.7	44	13.2	44	13.7	50	12.1	50	13.9	55	13.0	59	12.6	111.5
118.1	40		9.9	40	11.7	40	12.6	47	10.6	47	12.3	52	11.5	56	11.2	118.1
124.7	36		8.8	36	10.4	36	11.5	43	9.3	43	11.0	49	10.1	54	9.9	124.7
131.2	31		7.3	31	9.3	31	10.6	39	8.2	39	9.9	46	8.8	51	8.8	131.2
137.8	25		6.4	25	7.9	25	9.7	35	7.1	35	8.8	43	7.7	48	7.7	137.8
144.4	16		5.3	16	7.1	16	8.8	31	6.2	31	7.7	39	6.8	45	6.6	144.4
150.9								25	5.1	25	7.1	35	6.0	42	5.7	150.9
157.5								17	4.4	17	6.4	31	5.1	38	5.1	157.5
164.0												25	4.4	35	4.4	164.0
170.6												18	3.7	30	3.7	170.6
177.2														25	3.1	177.2
183.7														18	2.4	183.7
Telescoping sequence [%]																
Tel. 1	92			46		0		92		46		92		100		Tel. 1
Tel. 2	92			92		92		92		92		92		100		Tel. 2
Tel. 3	92			92		92		92		92		92		100		Tel. 3
Tel. 4	46			92		92		92		92		92		100		Tel. 4
Tel. 5	46			46		92		46		92		92		100		Tel. 5

View thousands of Crane Specifications on FreeCraneSpecs.com

ATF 130G-5 TADANO-Load rating chart

Counterweight 0lbs

Lifting capacities in 1,000 lbs according per SAE J765 on telescopic boom
On outriggers, 360° working area
Outriggers extended, outrigger base 24.61ft

Boom length [ft]

Working radius [ft]	42.0 ° ∠	42.0 1)		56.2 ° ∠		56.2 ° ∠		56.2 ° ∠		70.3 ° ∠		70.3 ° ∠		70.3 ° ∠		70.3 ° ∠		84.5 ° ∠		84.5 ° ∠		84.5 ° ∠		84.5 ° ∠		Working radius [ft]
8.9	70	254.6 *																								8.9
9.8	69	229.3 *	220.5 *	75	198.4	75	194.0	75	102.7	79	198.4	79	188.9	79	102.7	79	77.8									9.8
11.5	66	204.6	196.2	73	196.0	73	185.2	73	99.6	77	194.9	77	177.0	77	102.7	77	72.8	79	154.3	79	110.2	79	102.7	79	76.7	11.5
13.1	64	182.8	175.3	71	175.0	71	174.2	71	94.4	76	173.9	76	166.7	76	101.4	76	68.3	78	154.3	78	110.2	78	102.7	78	72.8	13.1
14.8	61	162.9	157.6	70	157.4	70	158.5	70	89.7	74	143.3	74	149.3	74	97.0	74	64.6	77	131.0	77	110.2	77	100.8	77	68.6	14.8
16.4	59	142.6	142.6	68	137.3	68	140.2	68	85.5	73	120.6	73	125.9	73	92.8	73	61.1	76	111.8	76	110.2	76	97.0	76	64.8	16.4
19.7	53	103.8	103.8	64	99.2	64	102.1	64	78.3	70	86.9	70	92.4	70	84.9	70	55.1	74	81.8	74	87.1	74	90.4	74	58.4	19.7
23.0	47	78.7	78.7	60	77.6	60	77.4	60	72.3	67	65.9	67	70.8	67	77.4	67	50.0	72	63.3	72	67.9	72	72.3	72	53.1	23.0
26.2	40	60.4	60.4	56	59.7	56	60.4	56	62.8	64	53.6	64	58.0	64	62.4	64	46.1	69	52.5	69	54.9	69	59.1	69	48.7	26.2
29.5	31	48.1	48.1	52	47.6	52	48.3	52	51.6	61	43.9	61	48.3	61	53.4	61	42.3	67	43.0	67	47.4	67	49.4	67	45.0	29.5
32.8	19	38.6	38.6	47	38.1	47	40.1	47	42.3	58	36.6	58	39.5	58	44.5	58	38.8	64	36.6	64	40.3	64	43.9	64	41.9	32.8
36.1				42	31.1	42	32.8	42	35.3	55	30.0	55	33.1	55	37.3	55	35.9	62	31.5	62	34.8	62	37.7	62	38.6	36.1
39.4				36	25.8	36	27.6	36	30.0	51	24.7	51	27.8	51	32.2	51	32.4	59	26.5	59	30.0	59	32.8	59	34.4	39.4
45.9				20	18.1	20	19.6	20	21.8	44	17.0	44	19.8	44	23.8	44	24.0	53	18.7	53	21.8	53	24.5	53	26.0	45.9
52.5										34	11.5	34	14.3	34	18.3	34	18.3	47	13.0	47	16.3	47	18.7	47	20.1	52.5
59.1										21	7.5	21	10.4	21	14.1	21	14.1	41	9.0	41	12.1	41	14.6	41	15.9	59.1
65.6																		33	5.7	33	9.0	33	11.5	33	12.8	65.6
72.2																		22	3.7	22	6.6	22	9.0	22	10.4	72.2
78.7																										78.7
85.3																										85.3
91.9																										91.9
98.4																										98.4
105.0																										105.0
111.5																										111.5
Telescoping sequence [%]																										
Tel. 1	0			0		0		0		46		0		0		0		46		0		0		0		Tel. 1
Tel. 2	0			46		0		0		46		46		0		0		46		46		0		0		Tel. 2
Tel. 3	0			0		46		0		0		46		0		0		46		46		46		0		Tel. 3
Tel. 4	0			0		0		0		0		0		46		0		0		46		46		46		Tel. 4
Tel. 5	0			0		0		46		0		0		46		92		0		0		46		92		Tel. 5

1) Over rear with superstructure locking pin engaged
* With additional lifting equipment

Boom length [ft]

Working radius [ft]	98.7 ° ∠			98.7 ° ∠		98.7 ° ∠		98.7 ° ∠		112.9 ° ∠		112.9 ° ∠		112.9 ° ∠		112.9 ° ∠		127.0 ° ∠		127.0 ° ∠		127.0 ° ∠		141.2 ° ∠		141.2 ° ∠		141.2 ° ∠		141.2 ° ∠		Working radius [ft]
8.9																																8.9
9.8																																9.8
11.5																																11.5
13.1																																13.1
14.8	80		116.0	80	110.2	80	93.5	80	58.9																							14.8
16.4	79		98.1	79	104.1	79	93.5	79	56.4	80	92.2	80	83.8	80	65.0	80	55.6															16.4
19.7	77		73.0	77	78.0	77	84.0	77	51.4	79	70.1	79	75.4	79	63.5	79	52.0	80	67.7	80	60.4	80	45.2									19.7
23.0	75		56.9	75	61.5	75	66.6	75	46.7	77	55.6	77	60.4	77	59.1	77	48.7	79	54.5	79	58.9	79	45.2	80	51.1	80	50.9	80	45.6	80	41.9	23.0
26.2	73		45.6	73	49.8	73	54.7	73	42.8	75	45.2	75	49.6	75	53.4	75	45.2	77	45.0	77	48.9	77	44.3	79	42.5	79	44.5	79	45.4	79	41.9	26.2
29.5	71		38.4	71	41.4	71	45.9	71	39.2	74	37.5	74	41.7	74	45.2	74	42.1	76	37.7	76	41.4	76	40.8	78	35.7	78	37.7	78	40.6	78	41.4	29.5
32.8	69		32.6	69	35.7	69	39.0	69	36.4	72	31.3	72	35.5	72	38.8	72	39.2	75	32.0	75	35.7	75	37.9	76	30.4	76	32.2	76	35.1	76	36.6	32.8
36.1	67		27.8	67	31.1	67	34.8	67	33.7	70	26.7	70	30.6	70	33.7	70	35.7	73	27.3	73	30.9	73	33.7	75	26.2	75	28.0	75	30.4	75	32.2	36.1
39.4	64		23.6	64	27.1	64	31.1	64	31.3	68	23.8	68	27.3	68	30.4	68	32.4	72	23.6	72	27.1	72	29.8	74	22.7	74	24.3	74	26.9	74	28.4	39.4
45.9	60		17.2	60	20.5	60	24.0	60	26.2	65	18.1	65	21.6	65	24.5	65	26.0	69	19.6	69	22.3	69	23.8	71	18.1	71	18.7	71	21.2	71	22.7	45.9
52.5	55		11.7	55	15.0	55	18.3	55	20.5	61	13.7	61	17.0	61	19.2	61	20.9	65	15.0	65	17.9	65	19.8	68	14.3	68	15.4	68	17.9	68	19.2	52.5
59.1	50		7.5	50	10.6	50	14.1	50	16.3	57	9.5	57	12.8	57	15.2	57	16.8	62	11.2	62	14.3	62	16.5	66	11.0	66	12.3	66	14.6	66	15.9	59.1
65.6	45		4.6	45	7.5	45	11.0	45	13.0	53	6.4	53	9.7	53	11.9	53	13.7	58	7.9	58	11.2	58	13.2	63	7.9	63	9.7	63	11.9	63	13.0	65.6
72.2				39	5.1	39	8.6	39	10.6	48	4.0	48	7.1	48	9.7	48	11.0	55	5.5	55	8.8	55	10.8	59	5.5	59	7.1	59	9.5	59	10.6	72.2
78.7				31	3.1	31	6.6	31	8.6			43	5.1	43	7.5	43	9.0	51	3.3	51	6.6	51	8.8	56	3.7	56	5.1	56	7.3	56	8.6	78.7
85.3						22	4.9	22	6.8			38	3.3	38	5.7	38	7.5			47	4.9	47	7.1			53	3.3	53	5.5	53	7.1	85.3
91.9														31	4.6	31	6.2			42	3.3	42	5.5					49	4.2	49	5.5	91.9
98.4														23	3.3	23	4.9					37	4.4					45	2.9	45	4.4	98.4
105.0																						31	3.3							41	3.1	105.0
111.5																						24	2.4									111.5
Telescoping sequence [%]																																
Tel. 1	92			46		0		0		92		46		0		0		92		46		0		92		92		46		0		Tel. 1
Tel. 2	46			46		46		0		46		46		46		0		46		46		0		92		46		46		46		Tel. 2
Tel. 3	46			46		46		0		46		46		46		46		46		46		92		46		46		46		92		Tel. 3
Tel. 4	0			46		46		92		46		46		46		92		46		46		92		46		46		92		92		Tel. 4
Tel. 5	0			0		46		92		0		46		92		92		46		92		92		46		92		92		92		Tel. 5

Boom length [ft]

Working radius [ft]	155.4 ° ∠			155.4 ° ∠		155.4 ° ∠		169.6 ° ∠		169.6 ° ∠		183.7 ° ∠		196.8 ° ∠		Working radius [ft]
8.9																8.9
9.8																9.8
11.5																11.5
13.1																13.1
14.8																14.8
16.4																16.4
19.7																19.7
23.0																23.0
26.2	80		41.0	80	41.0	80	34.6									26.2
29.5	79		34.6	79	37.0	79	34.6	80	34.2	80	31.5					29.5
32.8	78		29.8	78	32.0	78	34.2	79	29.3	79	31.5	80	29.1			32.8
36.1	77		25.6	77	27.8	77	30.0	78	25.6	78	28.0	79	25.6	80	23.4	36.1
39.4	76		22.3	76	24.5	76	26.5	77	22.3	77	24.7	78	22.5	79	21.6	39.4
45.9	73		17.9	73	19.2	73	20.9	75	17.9	75	19.4	77	17.6	78	17.0	45.9
52.5	71		14.1	71	15.7	71	17.0	73	14.3	73	16.3	75	14.3	76	13.7	52.5
59.1	69		10.8	69	12.8	69	14.3	71	11.2	71	13.4	73	11.7	74	11.0	59.1
65.6	66		8.2	66	10.4	66	12.1	69	8.8	69	11.0	71	9.3	73	8.8	65.6
72.2	63		6.2	63	8.2	63	9.9	67	6.6	67	9.0	69	7.3	71	7.1	72.2
78.7	61		4.2	61	6.2	61	7.7	64	4.9	64	7.1	67	5.5	69	5.3	78.7
85.3				58	4.4	58	6.2			62	5.3	65	4.2			85.3
91.9				55	2.9	55	4.6			59	4.0					91.9
98.4						51	3.3			56	2.6					98.4
105.0						48	2.4									105.0
111.5																111.5
Telescoping sequence [%]																
Tel. 1	92			46		0		92		46		92		100		Tel. 1
Tel. 2	92			92		92		92		92		92		100		Tel. 2
Tel. 3	92			92		92		92		92		92		100		Tel. 3
Tel. 4	46			92		92		92		92		92		100		Tel. 4
Tel. 5	46			46		92		46		92		92		100		Tel. 5

View thousands of Crane Specifications on FreeCraneSpecs.com

ATF 130G-5 WORKING RANGE CHART

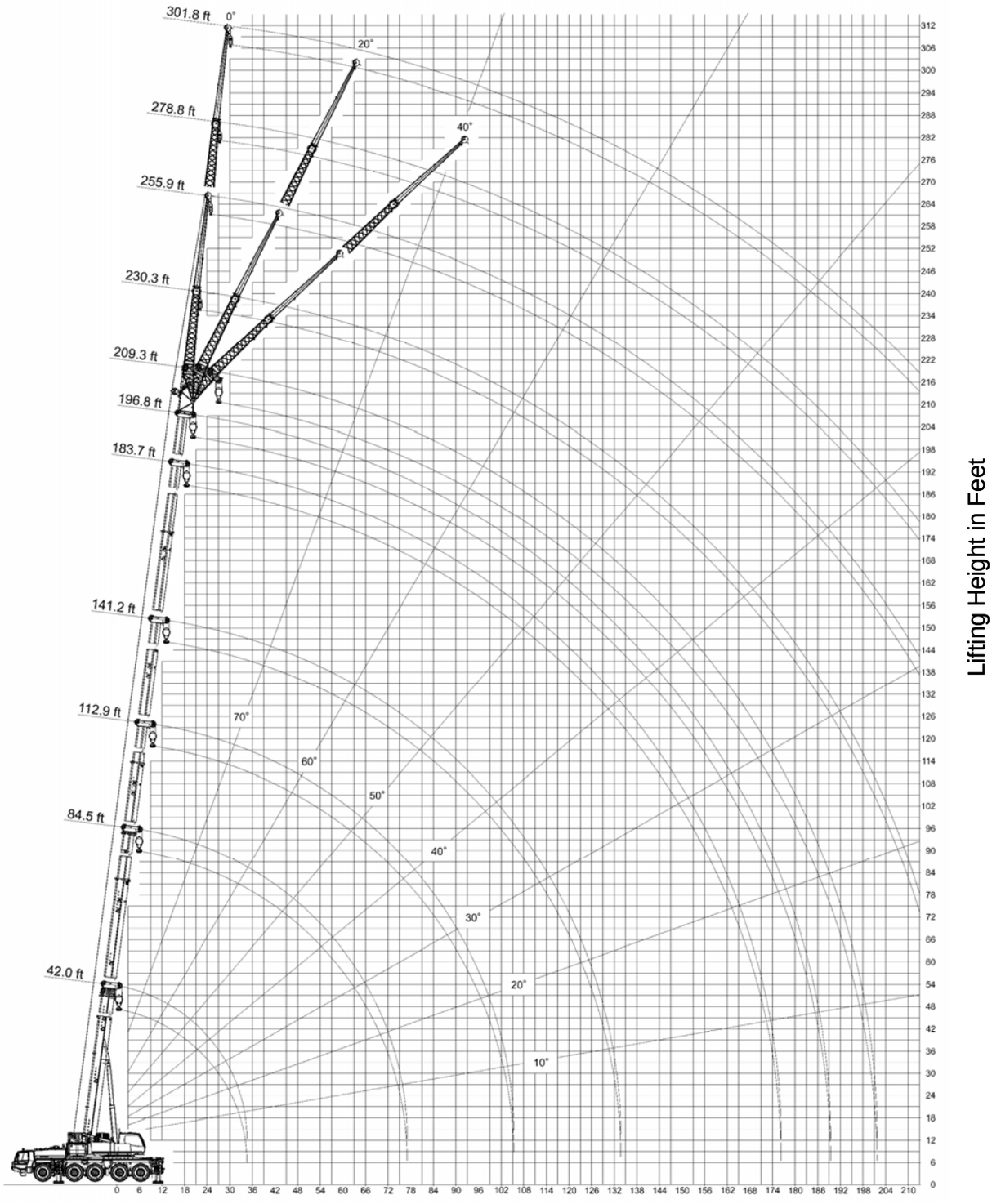

NOTE: Boom and jib geometry shown are for unloaded condition and machine standing level on firm supporting surface. Boom deflection and subsequent radius and boom angle change must be accounted for when applying load to hook.

View thousands of Crane Specifications on FreeCraneSpecs.com

ATF 130G-5 TADANO-Load rating chart

Counterweight 92,593 lbs

Working radius [ft]	Lifting capacities in 1,000 lbs according per SAE J765 on fly jib 12.5 ft On outriggers, 360° working area **Outrigger base 24.61 ft** Boom length 42.0 ft Fly jib 12.5 ft offset						Boom length 42.0 ft to 84.5 ft Fly jib 12.5 ft offset						Boom length 42.0 ft to 112.9 ft Fly jib 12.5 ft offset						Working radius [ft]
	0°		20°		40°		0°		20°		40°		0°		20°		40°		
	∠°		∠°		∠°		∠°		∠°		∠°		∠°		∠°		∠°		
9.8	73	88.2	77	72.1															9.8
11.5	72	88.2	75	69.0	77	55.6													11.5
13.1	70	88.2	73	66.1	75	54.0	79	77.2											13.1
14.8	68	85.8	71	63.7	74	52.5	78	77.2	80	75.8									14.8
16.4	66	81.1	69	61.3	72	51.1	77	77.2	79	73.9									16.4
19.7	62	73.4	65	57.3	67	48.9	76	77.2	77	70.3	79	55.1	79	48.3					19.7
23.0	58	67.0	61	53.8	63	47.0	74	77.2	75	67.0	77	53.4	78	45.2	79	40.6	80	36.8	23.0
26.2	54	61.7	57	50.9	59	45.2	72	77.2	73	64.2	75	51.8	76	42.8	78	38.6	79	35.3	26.2
29.5	49	57.3	52	48.5	54	43.9	70	77.2	71	61.5	72	50.5	75	40.6	76	36.8	77	34.0	29.5
32.8	44	53.6	47	46.3	49	43.0	68	77.2	69	59.1	70	49.2	73	38.6	75	35.3	76	32.6	32.8
36.1	38	50.5	41	44.5	43	42.3	65	73.9	67	57.1	68	48.1	72	36.8	73	33.7	74	31.5	36.1
39.4	32	47.6	35	43.2			63	70.1	65	55.1	66	47.0	70	35.3	71	32.6	72	30.4	39.4
45.9	11	44.1					59	61.7	60	51.6	61	45.2	67	32.6	68	30.4	69	28.7	45.9
52.5							54	50.7	55	48.9	56	43.9	64	30.6	65	28.4	66	26.9	52.5
59.1							49	42.1	50	42.5	51	42.8	60	28.7	61	26.9	62	25.8	59.1
65.6							43	35.5	45	35.9	45	36.2	57	27.1	58	25.6	59	24.7	65.6
72.2							37	30.4	38	30.9	39	30.9	53	26.0	54	24.5	55	23.6	72.2
78.7							29	26.5	30	27.3			49	24.9	50	23.6	51	22.9	78.7
85.3							18	23.6					45	24.0	46	22.9	46	22.3	85.3
91.9													40	22.5	41	22.3			91.9
98.4													35	19.8	36	20.3			98.4
105.0													28	17.6	29	17.9			105.0
111.5													20	15.9					111.5
118.1																			118.1
124.7																			124.7
131.2																			131.2
144.4																			144.4
157.5																			157.5
170.6																			170.6
183.7																			183.7
196.8																			196.8
210.0																			210.0
223.1																			223.1
236.2																			236.2
Telescoping sequence %																			
Tel. 1	0						46						46						Tel. 1
Tel. 2	0						46						46						Tel. 2
Tel. 3	0						46						46						Tel. 3
Tel. 4	0						0						46						Tel. 4
Tel. 5	0						0						46						Tel. 5

Working radius [ft]	Lifting capacities in 1,000 lbs according per SAE J765 on fly jib 12.5 ft On outriggers, 360° working area **Outrigger base 24.61 ft** Boom length 42.0 ft to 141.2 ft Fly jib 12.5 ft offset						Boom length 42.0 ft to 183.7 ft Fly jib 12.5 ft offset						Boom length 42.0 ft to 196.8 ft Fly jib 12.5 ft offset						Working radius [ft]
	0°		20°		40°		0°		20°		40°		0°		20°		40°		
	∠°		∠°		∠°		∠°		∠°		∠°		∠°		∠°		∠°		
9.8																			9.8
11.5																			11.5
13.1																			13.1
14.8																			14.8
16.4																			16.4
19.7																			19.7
23.0																			23.0
26.2																			26.2
29.5	79	36.6	80	33.1	80	31.1													29.5
32.8	77	34.8	78	31.7	79	30.0													32.8
36.1	76	33.5	77	30.6	78	28.9													36.1
39.4	75	32.2	76	29.5	77	28.0	79	19.8	80	19.8									39.4
45.9	73	29.8	74	27.6	75	26.2	77	19.8	78	19.4	79	18.7	78	17.2	79	17.2	80	17.2	45.9
52.5	70	27.8	71	26.0	72	24.9	76	19.2	77	18.3	77	17.9	77	17.2	78	16.8	78	16.3	52.5
59.1	68	26.2	69	24.5	69	23.6	74	18.1	75	17.4	75	17.0	75	16.5	76	15.9	77	15.4	59.1
65.6	65	24.9	66	23.4	67	22.7	72	17.0	73	16.5	73	16.1	74	15.7	74	15.2	75	14.8	65.6
72.2	62	23.6	63	22.3	64	21.6	70	16.1	71	15.7	71	15.4	72	14.8	73	14.3	73	14.1	72.2
78.7	59	22.0	60	21.4	61	20.9	68	15.2	69	15.0	69	14.8	70	14.1	71	13.7	71	13.4	78.7
85.3	56	20.5	57	20.3	58	20.3	66	14.3	67	14.1	67	13.9	68	13.4	69	13.0	70	13.0	85.3
91.9	53	19.2	54	19.0	55	19.2	64	13.7	65	13.4	65	13.2	66	12.8	67	12.6	68	12.3	91.9
98.4	50	17.9	51	17.9	52	17.9	62	13.0	63	12.8	63	12.6	64	12.1	65	11.9	66	11.7	98.4
105.0	47	16.1	48	16.3	48	16.5	60	12.3	61	12.1	61	11.9	62	11.5	63	11.2	64	11.2	105.0
111.5	43	14.3	44	14.6	44	14.8	57	11.7	58	11.5	59	11.5	60	11.0	61	10.8	62	10.8	111.5
118.1	39	12.6	40	12.8			55	11.2	56	11.0	56	11.0	58	10.4	59	10.4	60	10.1	118.1
124.7	34	11.0	35	11.2			53	10.8	54	10.6	54	10.6	56	9.9	57	9.9	57	9.9	124.7
131.2	29	9.7	30	9.9			50	10.4	51	10.1	51	10.1	54	9.7	55	9.5	55	9.5	131.2
144.4	11	7.5					44	8.8	45	8.8	45	9.0	49	8.2	50	8.4	50	8.4	144.4
157.5							38	6.8	38	7.1			44	6.8	44	7.1			157.5
170.6							30	5.3	30	5.3			37	5.3	38	5.3			170.6
183.7							17	4.0					29	4.0	30	4.0			183.7
196.8													17	2.9					196.8
210.0																			210.0
223.1																			223.1
236.2																			236.2
Telescoping sequence %																			
Tel. 1	92						92						100						Tel. 1
Tel. 2	92						92						100						Tel. 2
Tel. 3	46						92						100						Tel. 3
Tel. 4	46						92						100						Tel. 4
Tel. 5	46						92						100						Tel. 5

View thousands of Crane Specifications on FreeCraneSpecs.com

ATF 130G-5 TADANO-Load rating chart

Counterweight 92,593 lbs

Working radius [ft]	Lifting capacities in 1,000 lbs according per SAE J765 on fly jib 33.5 ft On outriggers, 360° working area **Outrigger base 24.61 ft** Boom length 42.0 ft Fly jib 33.5 ft offset						Boom length 42.0 ft to 84.5 ft Fly jib 33.5 ft offset						Boom length 42.0 ft to 112.9 ft Fly jib 33.5 ft offset						Working radius [ft]
	0°		20°		40°		0°		20°		40°		0°		20°		40°		
	∠°		∠°		∠°		∠°		∠°		∠°		∠°		∠°		∠°		
9.8	76	33.1																	9.8
11.5	75	33.1																	11.5
13.1	74	33.1					80	33.1											13.1
14.8	73	33.1					79	33.1											14.8
16.4	71	33.1	79	31.1			78	33.1											16.4
19.7	69	33.1	77	28.7			77	33.1											19.7
23.0	66	33.1	74	26.7			75	33.1	80	32.4			79	29.5					23.0
26.2	63	33.1	71	24.9	78	20.1	74	33.1	79	30.6			77	29.5					26.2
29.5	60	30.4	68	23.4	75	19.2	72	33.1	77	29.1			76	29.5	80	26.9			29.5
32.8	57	27.8	65	22.0	72	18.5	70	33.1	75	27.8	80	20.5	75	29.5	79	25.8			32.8
36.1	54	25.1	62	20.7	69	17.6	69	33.1	74	26.5	78	19.8	74	29.5	78	24.7			36.1
39.4	51	22.9	59	19.8	65	17.2	67	33.1	72	25.4	76	19.4	72	29.3	76	23.8	80	20.3	39.4
45.9	45	19.6	52	18.1	58	16.1	64	33.1	68	23.4	72	18.3	70	26.7	74	22.0	77	19.2	45.9
52.5	37	17.2	45	16.8	50	15.4	60	30.2	65	21.6	69	17.4	67	24.5	71	20.5	74	18.1	52.5
59.1	27	15.2	35	15.7			56	27.1	61	20.3	65	16.8	64	22.7	68	19.4	71	17.2	59.1
65.6	13	13.4					52	24.5	57	19.0	61	16.1	61	21.2	65	18.3	68	16.3	65.6
72.2							48	21.8	53	17.9	56	15.7	58	19.8	62	17.4	65	15.7	72.2
78.7							44	19.8	48	17.2	51	15.2	55	18.7	59	16.5	62	15.0	78.7
85.3							39	18.1	43	16.3	46	15.0	52	17.9	56	15.9	58	14.6	85.3
91.9							33	16.5	38	15.7			49	17.0	53	15.2	55	14.1	91.9
98.4							27	15.2	31	15.2			45	16.1	49	14.6	51	13.7	98.4
105.0							18	14.1	22	15.0			41	15.7	45	14.1	47	13.4	105.0
111.5													37	15.0	41	13.7	42	13.0	111.5
118.1													33	14.6	36	13.4			118.1
124.7													27	13.7	30	13.2			124.7
131.2													20	12.3	23	12.6			131.2
144.4																			144.4
157.5																			157.5
170.6																			170.6
183.7																			183.7
196.8																			196.8
210.0																			210.0
223.1																			223.1
236.2																			236.2
Telescoping sequence %																			
Tel. 1	0						46						46						Tel. 1
Tel. 2	0						46						46						Tel. 2
Tel. 3	0						46						46						Tel. 3
Tel. 4	0						0						46						Tel. 4
Tel. 5	0						0						46						Tel. 5

Working radius [ft]	Lifting capacities in 1,000 lbs according per SAE J765 on fly jib 33.5 ft On outriggers, 360° working area **Outrigger base 24.61 ft** Boom length 42.0 ft to 141.2 ft Fly jib 33.5 ft offset						Boom length 42.0 ft to 183.7 ft Fly jib 33.5 ft offset						Boom length 42.0 ft to 196.8 ft Fly jib 33.5 ft offset						Working radius [ft]
	0°		20°		40°		0°		20°		40°		0°		20°		40°		
	∠°		∠°		∠°		∠°		∠°		∠°		∠°		∠°		∠°		
9.8																			9.8
11.5																			11.5
13.1																			13.1
14.8																			14.8
16.4																			16.4
19.7																			19.7
23.0																			23.0
26.2	80	23.4																	26.2
29.5	79	23.4																	29.5
32.8	78	23.4																	32.8
36.1	77	23.4																	36.1
39.4	76	23.4	80	22.3			80	14.1					80	12.6					39.4
45.9	74	23.4	78	20.7	80	18.1	78	14.1					79	12.6					45.9
52.5	72	23.1	75	19.6	78	17.0	77	14.1	80	14.1			78	12.6	80	12.6			52.5
59.1	70	21.8	73	18.3	76	16.3	75	14.1	78	13.4	80	12.6	76	12.6	79	12.3			59.1
65.6	68	20.5	71	17.4	73	15.7	74	14.1	76	12.8	78	11.9	75	12.6	77	11.9	79	11.0	65.6
72.2	66	19.4	69	16.5	71	15.0	72	13.7	75	12.1	77	11.5	73	12.6	76	11.2	78	10.6	72.2
78.7	63	18.3	66	15.9	69	14.3	70	13.0	73	11.7	75	11.0	72	11.9	74	10.8	76	10.1	78.7
85.3	61	17.4	64	15.2	66	13.9	68	12.3	71	11.2	73	10.6	70	11.5	73	10.4	75	9.9	85.3
91.9	58	16.5	61	14.6	64	13.4	67	11.9	69	10.8	71	10.1	69	11.0	71	9.9	73	9.5	91.9
98.4	56	15.9	59	14.1	61	13.0	65	11.5	68	10.4	69	9.9	67	10.4	69	9.7	71	9.3	98.4
105.0	53	15.2	56	13.7	58	12.6	63	10.8	66	10.1	67	9.5	65	9.9	68	9.3	69	8.8	105.0
111.5	50	14.8	53	13.2	55	12.3	61	10.4	64	9.7	66	9.3	64	9.7	66	9.0	68	8.6	111.5
118.1	47	13.4	50	12.8	52	12.1	59	10.1	62	9.5	63	9.0	62	9.3	64	8.8	66	8.4	118.1
124.7	44	11.9	47	12.6	49	11.7	57	9.7	60	9.0	61	8.8	60	8.8	63	8.4	64	8.2	124.7
131.2	41	10.6	44	11.2	45	11.7	55	9.3	58	8.8	59	8.6	58	8.6	61	8.2	62	7.9	131.2
144.4	33	8.4	36	8.8			51	8.4	53	8.4	55	8.2	54	7.9	57	7.5	58	7.3	144.4
157.5	22	6.6	25	6.8			46	7.3	48	7.7	49	7.7	50	6.8	52	6.6	53	6.6	157.5
170.6							40	5.7	43	6.2			45	5.5	47	6.0	48	6.0	170.6
183.7							33	4.4	36	4.9			39	4.2	42	4.9			183.7
196.8							24	3.3	27	3.5			33	3.1	35	3.5			196.8
210.0													24	2.2	26	2.4			210.0
223.1																			223.1
236.2																			236.2
Telescoping sequence %																			
Tel. 1	92						92						100						Tel. 1
Tel. 2	92						92						100						Tel. 2
Tel. 3	46						92						100						Tel. 3
Tel. 4	46						92						100						Tel. 4
Tel. 5	46						92						100						Tel. 5

View thousands of Crane Specifications on FreeCraneSpecs.com

ATF 130G-5 TADANO-Load rating chart

Counterweight 92,593 lbs

Lifting capacities in 1,000 lbs according per SAE J765 on fly jib 59.1 ft
On outriggers, 360° working area
Outrigger base 24.61 ft

Working radius [ft]	Boom length 42.0 ft						Boom length 42.0 ft to 84.5 ft						Boom length 42.0 ft to 112.9 ft						Working radius [ft]
	Fly jib 59.1 ft offset						Fly jib 59.1 ft offset						Fly jib 59.1 ft offset						
	0°		20°		40°		0°		20°		40°		0°		20°		40°		
	∠°		∠°		∠°		∠°		∠°		∠°		∠°		∠°		∠°		
9.8	80	17.2																	9.8
11.5	79	17.2																	11.5
13.1	78	17.2																	13.1
14.8	77	17.2																	14.8
16.4	76	17.2					80	16.3											16.4
19.7	74	17.2					79	16.3											19.7
23.0	73	16.5					78	16.3					80	13.0					23.0
26.2	71	15.7					77	16.3					79	13.0					26.2
29.5	69	14.8	80	11.5			75	16.3					78	13.0					29.5
32.8	67	13.9	78	11.0			74	15.7					77	13.0					32.8
36.1	65	13.2	76	10.4			73	15.2					76	13.0					36.1
39.4	63	12.6	74	9.9			71	14.6	79	10.6			75	13.0					39.4
45.9	58	11.2	70	9.0	79	7.7	69	13.4	77	9.7			73	13.0	79	9.5			45.9
52.5	54	10.1	65	8.4	75	7.3	66	12.6	74	9.3	80	7.5	71	12.6	77	9.0			52.5
59.1	49	9.3	60	7.7	70	6.8	63	11.7	71	8.6	77	7.1	69	11.9	75	8.6	80	7.1	59.1
65.6	44	8.6	55	7.3	64	6.6	60	10.8	68	8.2	74	6.8	66	11.2	73	8.2	78	6.6	65.6
72.2	38	7.9	49	6.8	58	6.4	57	10.1	65	7.7	71	6.6	64	10.6	70	7.9	75	6.4	72.2
78.7	32	7.3	43	6.6	50	6.2	54	9.5	62	7.3	67	6.4	62	10.1	68	7.5	73	6.4	78.7
85.3	24	6.8	35	6.4			51	8.8	58	7.1	64	6.2	59	9.5	65	7.3	70	6.2	85.3
91.9	10	6.6					47	8.4	55	6.8	60	6.0	57	9.0	62	6.8	67	6.0	91.9
98.4							43	7.9	51	6.6	56	6.0	54	8.6	60	6.6	64	5.7	98.4
105.0							39	7.5	47	6.4	51	5.7	51	8.2	57	6.4	61	5.7	105.0
111.5							35	7.3	42	6.2	46	5.7	48	7.9	54	6.4	58	5.5	111.5
118.1							30	7.1	37	6.2			45	7.5	51	6.2	55	5.5	118.1
124.7							24	6.6	31	6.0			42	7.3	48	6.0	51	5.5	124.7
131.2							16	6.6					39	7.1	44	6.0	47	5.5	131.2
144.4													31	6.6	35	5.7			144.4
157.5													19	6.4					157.5
170.6																			170.6
183.7																			183.7
196.8																			196.8
210.0																			210.0
223.1																			223.1
236.2																			236.2
Telescoping sequence %																			
Tel. 1	0						46						46						Tel. 1
Tel. 2	0						46						46						Tel. 2
Tel. 3	0						46						46						Tel. 3
Tel. 4	0						0						46						Tel. 4
Tel. 5	0						0						46						Tel. 5

Lifting capacities in 1,000 lbs according per SAE J765 on fly jib 59.1 ft
On outriggers, 360° working area
Outrigger base 24.61 ft

Working radius [ft]	Boom length 42.0 ft to 141.2 ft						Boom length 42.0 ft to 183.7 ft						Boom length 42.0 ft to 196.8 ft						Working radius [ft]
	Fly jib 59.1 ft offset						Fly jib 59.1 ft offset						Fly jib 59.1 ft offset						
	0°		20°		40°		0°		20°		40°		0°		20°		40°		
	∠°		∠°		∠°		∠°		∠°		∠°		∠°		∠°		∠°		
9.8																			9.8
11.5																			11.5
13.1																			13.1
14.8																			14.8
16.4																			16.4
19.7																			19.7
23.0																			23.0
26.2																			26.2
29.5																			29.5
32.8	80	12.1																	32.8
36.1	79	12.1																	36.1
39.4	78	12.1																	39.4
45.9	76	12.1					79	8.6					80	7.9					45.9
52.5	74	12.1	80	9.0			78	8.6					79	7.9					52.5
59.1	73	11.9	78	8.6			77	8.6					78	7.9					59.1
65.6	71	11.5	76	8.2	80	6.6	75	8.6	80	7.7			76	7.9					65.6
72.2	69	10.8	74	7.9	78	6.4	74	8.6	78	7.5			75	7.9	79	7.3			72.2
78.7	67	10.4	72	7.5	76	6.2	73	8.6	77	7.3	80	6.0	74	7.9	78	7.1			78.7
85.3	65	9.9	70	7.3	74	6.0	71	8.6	75	7.1	79	5.7	73	7.9	77	6.8	80	5.7	85.3
91.9	63	9.5	68	7.1	72	6.0	70	8.6	74	6.6	77	5.5	71	7.9	75	6.6	78	5.5	91.9
98.4	61	9.0	66	6.8	70	5.7	68	8.6	72	6.6	75	5.5	70	7.9	74	6.4	77	5.3	98.4
105.0	59	8.6	64	6.6	67	5.7	67	8.4	71	6.4	74	5.3	69	7.9	72	6.2	75	5.3	105.0
111.5	57	8.4	61	6.4	65	5.5	65	8.2	69	6.2	72	5.3	67	7.5	71	6.0	74	5.1	111.5
118.1	54	7.9	59	6.2	63	5.5	64	7.9	67	6.0	70	5.1	66	7.3	69	6.0	72	5.1	118.1
124.7	52	7.7	57	6.0	60	5.3	62	7.5	66	5.7	68	5.1	64	7.1	68	5.7	70	4.9	124.7
131.2	50	7.5	54	6.0	57	5.3	60	7.3	64	5.7	67	5.1	63	6.8	66	5.7	69	4.9	131.2
144.4	45	7.1	49	5.7	52	5.3	57	6.8	60	5.5	63	4.9	60	6.4	63	5.3	65	4.6	144.4
157.5	39	6.6	43	5.5	45	5.3	53	6.6	56	5.3	59	4.6	56	5.7	60	5.1	62	4.6	157.5
170.6	32	6.2	36	5.5			49	6.2	52	5.1	54	4.6	52	5.1	56	4.9	58	4.6	170.6
183.7	22	4.9					44	5.1	48	5.1	49	4.6	48	4.6	52	4.4	53	4.4	183.7
196.8							39	4.0	42	4.4			44	3.7	47	4.0	48	4.0	196.8
210.0							32	2.9	35	3.3			38	2.6	42	3.3			210.0
223.1							24	2.0	26	2.2					35	2.2			223.1
236.2																			236.2
Telescoping sequence %																			
Tel. 1	92						92						100						Tel. 1
Tel. 2	92						92						100						Tel. 2
Tel. 3	46						92						100						Tel. 3
Tel. 4	46						92						100						Tel. 4
Tel. 5	46						92						100						Tel. 5

View thousands of Crane Specifications on FreeCraneSpecs.com

ATF 130G-5 TADANO-Load rating chart

Counterweight 92,593 lbs

Working radius [ft]	Lifting capacities in 1,000 lbs according per SAE J765 on fly jib 82.0 ft On outriggers, 360° working area **Outrigger base 24.61 ft** Boom length 42.0 ft Fly jib 82.0 ft offset						Boom length 42.0 ft to 84.5 ft Fly jib 82.0 ft offset						Boom length 42.0 ft to 112.9 ft Fly jib 82.0 ft offset						Working radius [ft]
	0°		20°		40°		0°		20°		40°		0°		20°		40°		
	∠°		∠°		∠°		∠°		∠°		∠°		∠°		∠°		∠°		
9.8																			9.8
11.5																			11.5
13.1																			13.1
14.8	80	11.2																	14.8
16.4	79	11.2																	16.4
19.7	78	11.2																	19.7
23.0	76	11.2					80	10.8											23.0
26.2	75	11.2					79	10.8											26.2
29.5	73	11.2					78	10.8					80	8.8					29.5
32.8	72	11.2					77	10.8					79	8.8					32.8
36.1	70	11.2					76	10.8					78	8.8					36.1
39.4	69	11.2					75	10.8					77	8.8					39.4
45.9	66	10.8	78	9.9			72	10.8					75	8.8					45.9
52.5	62	10.4	75	8.8			70	10.6	79	9.5			74	8.8					52.5
59.1	59	9.7	71	7.9			68	10.4	77	9.0			72	8.8	80	8.4			59.1
65.6	55	8.4	67	7.3	79	6.2	65	9.9	74	8.6			70	8.8	78	8.2			65.6
72.2	51	7.5	64	6.6	74	5.7	63	9.7	72	7.9	80	6.2	68	8.8	76	7.9			72.2
78.7	47	6.6	59	6.2	70	5.5	60	9.3	69	7.5	77	6.0	66	8.8	74	7.5	80	6.0	78.7
85.3	43	6.0	55	5.7	65	5.1	58	8.8	67	7.1	74	5.5	64	8.6	71	7.3	78	5.7	85.3
91.9	38	5.3	50	5.3	60	4.9	55	8.2	64	6.6	71	5.3	62	8.4	69	7.1	75	5.5	91.9
98.4	33	4.9	45	5.1	54	4.6	52	7.3	61	6.2	68	5.1	60	8.2	67	6.8	73	5.3	98.4
105.0	26	4.4	38	4.6			49	6.8	58	6.0	65	5.1	57	7.9	65	6.4	70	5.1	105.0
111.5	18	4.0					46	6.2	55	5.5	61	4.9	55	7.7	62	6.2	68	5.1	111.5
118.1							43	5.7	51	5.3	57	4.6	52	7.1	60	6.0	65	4.9	118.1
124.7							39	5.3	48	5.1	53	4.4	50	6.6	57	5.5	62	4.9	124.7
131.2							35	4.9	44	4.9	49	4.4	47	6.2	54	5.3	59	4.6	131.2
144.4							26	4.2	34	4.4			42	5.3	48	5.1	53	4.4	144.4
157.5							11	3.7					35	4.6	42	4.6	45	4.4	157.5
170.6													27	4.2	33	4.4			170.6
183.7													15	3.7					183.7
196.8																			196.8
210.0																			210.0
223.1																			223.1
236.2																			236.2
Telescoping sequence %																			
Tel. 1	0						46						46						Tel. 1
Tel. 2	0						46						46						Tel. 2
Tel. 3	0						46						46						Tel. 3
Tel. 4	0						0						46						Tel. 4
Tel. 5	0						0						46						Tel. 5

Working radius [ft]	Lifting capacities in 1,000 lbs according per SAE J765 on fly jib 82.0 ft On outriggers, 360° working area **Outrigger base 24.61 ft** Boom length 42.0 ft to 141.2 ft Fly jib 82.0 ft offset						Boom length 42.0 ft to 183.7 ft Fly jib 82.0 ft offset						Boom length 42.0 ft to 196.8 ft Fly jib 82.0 ft offset						Working radius [ft]
	0°		20°		40°		0°		20°		40°		0°		20°		40°		
	∠°		∠°		∠°		∠°		∠°		∠°		∠°		∠°		∠°		
9.8																			9.8
11.5																			11.5
13.1																			13.1
14.8																			14.8
16.4																			16.4
19.7																			19.7
23.0																			23.0
26.2																			26.2
29.5																			29.5
32.8																			32.8
36.1	80	8.4																	36.1
39.4	79	8.4																	39.4
45.9	78	8.4					80	6.4											45.9
52.5	76	8.4					79	6.4					80	6.0					52.5
59.1	75	8.4					78	6.4					79	6.0					59.1
65.6	73	8.4	80	7.9			77	6.4					78	6.0					65.6
72.2	72	8.4	78	7.7			76	6.4					77	6.0					72.2
78.7	70	8.4	77	7.5			74	6.4	80	6.4			76	6.0					78.7
85.3	68	8.4	75	7.3	80	6.0	73	6.4	79	6.4			74	6.0	80	6.0			85.3
91.9	67	8.2	73	7.1	78	5.7	72	6.4	78	6.4			73	6.0	79	6.0			91.9
98.4	65	8.2	71	6.8	76	5.5	71	6.4	76	6.2	81	5.5	72	6.0	78	5.7			98.4
105.0	63	7.9	69	6.6	75	5.3	69	6.4	75	6.0	79	5.3	71	6.0	76	5.5	80	5.1	105.0
111.5	61	7.7	67	6.4	72	5.3	68	6.4	74	5.7	78	5.3	70	6.0	75	5.3	79	5.1	111.5
118.1	59	7.5	65	6.2	70	5.1	67	6.2	72	5.5	76	5.1	68	5.7	74	5.1	77	4.9	118.1
124.7	57	7.3	63	6.0	68	4.9	65	6.0	71	5.3	75	4.9	67	5.5	72	5.1	76	4.6	124.7
131.2	55	7.1	61	5.7	66	4.9	64	5.7	69	5.1	73	4.9	66	5.3	71	4.9	74	4.4	131.2
144.4	51	6.4	57	5.5	61	4.6	61	5.5	66	4.9	69	4.4	63	5.1	68	4.4	71	4.2	144.4
157.5	47	5.7	52	5.1	56	4.4	58	5.1	63	4.4	66	4.2	60	4.6	65	4.2	68	4.0	157.5
170.6	42	5.1	47	4.9	50	4.4	54	4.9	59	4.2	62	4.0	57	4.2	62	3.7	65	3.7	170.6
183.7	36	4.6	41	4.6			51	4.4	55	4.0	58	3.7	54	3.7	58	3.5	61	3.3	183.7
196.8	28	4.0	33	4.4			47	4.2	51	3.7	53	3.5	50	3.3	54	3.1	57	3.1	196.8
210.0	18	3.1					42	3.1	47	3.7	48	3.5	46	2.9	50	2.9	52	2.9	210.0
223.1							36	2.2	41	2.9			41	2.0	46	2.6	47	2.6	223.1
236.2									34	2.0									236.2
Telescoping sequence %																			
Tel. 1	92						92						100						Tel. 1
Tel. 2	92						92						100						Tel. 2
Tel. 3	46						92						100						Tel. 3
Tel. 4	46						92						100						Tel. 4
Tel. 5	46						92						100						Tel. 5

View thousands of Crane Specifications on FreeCraneSpecs.com

ATF 130G-5 TADANO-Load rating chart

Counterweight 92,593 lbs

Working radius [ft]	Lifting capacities in 1,000 lbs according per SAE J765 on fly jib 105.0 ft On outriggers, 360° working area **Outrigger base 24.61 ft** Boom length 42.0 ft Fly jib 105.0 ft offset						Boom length 42.0 ft to 84.5 ft Fly jib 105.0 ft offset						Boom length 42.0 ft to 112.9 ft Fly jib 105.0 ft offset						Working radius [ft]
	0°		20°		40°		0°		20°		40°		0°		20°		40°		
	∠°		∠°		∠°		∠°		∠°		∠°		∠°		∠°		∠°		
9.8																			9.8
11.5																			11.5
13.1																			13.1
14.8																			14.8
16.4																			16.4
19.7	80	7.7																	19.7
23.0	79	7.7																	23.0
26.2	77	7.7					80	7.3											26.2
29.5	76	7.7					80	7.3											29.5
32.8	75	7.7					79	7.3											32.8
36.1	74	7.7					78	7.3					80	6.2					36.1
39.4	73	7.7					77	7.3					79	6.2					39.4
45.9	70	7.7					75	7.3					77	6.2					45.9
52.5	67	7.7					73	7.3					75	6.2					52.5
59.1	65	7.7	78	6.8			71	7.3					74	6.2					59.1
65.6	62	7.1	75	6.2			69	7.3	79	6.8			72	6.2	82	6.2			65.6
72.2	59	6.2	72	5.7			67	7.3	77	6.4			70	6.2	80	6.2			72.2
78.7	56	5.5	69	5.1			65	7.3	75	6.0			69	6.2	78	6.0			78.7
85.3	52	4.9	66	4.9	78	4.2	63	6.8	73	5.5			67	6.2	76	5.5			85.3
91.9	49	4.4	63	4.4	75	4.0	60	6.2	70	5.1	79	4.2	65	6.2	74	5.5			91.9
98.4	46	4.0	59	4.2	71	3.5	58	5.5	68	4.9	77	4.0	64	6.2	72	5.3	80	4.0	98.4
105.0	42	3.5	55	3.7	66	3.5	56	5.1	66	4.6	74	3.7	62	6.2	70	4.9	78	3.7	105.0
111.5	38	3.1	51	3.5	62	3.3	53	4.6	63	4.4	72	3.5	60	5.7	68	4.6	76	3.7	111.5
118.1	33	2.9	46	3.3	56	3.1	50	4.2	60	4.2	69	3.3	58	5.3	66	4.4	73	3.5	118.1
124.7	28	2.6	41	3.1	50	3.1	48	4.0	58	4.0	66	3.3	55	4.9	64	4.2	71	3.3	124.7
131.2	21	2.4	33	3.1			45	3.5	55	3.7	63	3.1	53	4.4	62	4.0	69	3.3	131.2
144.4							39	3.1	49	3.3	55	3.1	49	4.0	57	3.7	64	3.1	144.4
157.5							32	2.6	41	3.1	46	2.9	44	3.3	52	3.3	58	2.9	157.5
170.6							23	2.4	31	2.9			38	3.1	46	3.1	51	2.9	170.6
183.7													32	2.6	39	3.1			183.7
196.8													24	2.4	30	2.9			196.8
210.0																			210.0
223.1																			223.1
236.2																			236.2
Telescoping sequence %																			
Tel. 1	0						46						46						Tel. 1
Tel. 2	0						46						46						Tel. 2
Tel. 3	0						46						46						Tel. 3
Tel. 4	0						0						46						Tel. 4
Tel. 5	0						0						46						Tel. 5

Working radius [ft]	Lifting capacities in 1,000 lbs according per SAE J765 on fly jib 105.0 ft On outriggers, 360° working area **Outrigger base 24.61 ft** Boom length 42.0 ft to 141.2 ft Fly jib 105.0 ft offset						Boom length 42.0 ft to 183.7 ft Fly jib 105.0 ft offset						Boom length 42.0 ft to 196.8 ft Fly jib 105.0 ft offset						Working radius [ft]
	0°		20°		40°		0°		20°		40°		0°		20°		40°		
	∠°		∠°		∠°		∠°		∠°		∠°		∠°		∠°		∠°		
9.8																			9.8
11.5																			11.5
13.1																			13.1
14.8																			14.8
16.4																			16.4
19.7																			19.7
23.0																			23.0
26.2																			26.2
29.5																			29.5
32.8																			32.8
36.1																			36.1
39.4	80	6.0																	39.4
45.9	79	6.0																	45.9
52.5	78	6.0					80	4.6											52.5
59.1	76	6.0					79	4.6					80	4.4					59.1
65.6	75	6.0					78	4.6					79	4.4					65.6
72.2	74	6.0					77	4.6					78	4.4					72.2
78.7	72	6.0	80	5.7			76	4.6					77	4.4					78.7
85.3	71	6.0	79	5.5			75	4.6					76	4.4					85.3
91.9	69	6.0	77	5.3			74	4.6					75	4.4					91.9
98.4	68	6.0	75	5.1			73	4.6	80	4.4			74	4.4	80	4.2			98.4
105.0	66	6.0	74	5.1	80	4.0	71	4.6	78	4.4			73	4.4	79	4.2			105.0
111.5	65	6.0	72	4.9	78	3.7	70	4.6	77	4.2			72	4.4	78	4.0			111.5
118.1	63	5.7	70	4.6	77	3.5	69	4.6	76	4.2			71	4.4	77	4.0			118.1
124.7	61	5.5	69	4.6	75	3.5	68	4.6	74	4.0	79	3.5	69	4.4	76	4.0	80	3.5	124.7
131.2	60	5.3	67	4.4	73	3.3	67	4.6	73	4.0	78	3.5	68	4.2	74	3.7	79	3.5	131.2
144.4	56	4.9	63	4.0	69	3.3	64	4.4	70	3.7	75	3.3	66	4.0	72	3.5	76	3.3	144.4
157.5	52	4.2	59	3.7	65	3.1	61	4.0	67	3.5	72	3.1	63	3.7	69	3.3	73	3.1	157.5
170.6	48	3.7	55	3.5	60	2.9	58	3.7	64	3.3	68	3.1	61	3.5	66	3.1	70	2.9	170.6
183.7	44	3.3	50	3.3	55	2.9	55	3.5	61	3.1	65	2.9	58	3.1	63	2.9	67	2.6	183.7
196.8	39	2.9	45	3.1	48	2.9	52	3.3	58	2.9	61	2.6	55	2.9	60	2.6	64	2.4	196.8
210.0	33	2.6	39	2.9			49	3.1	54	2.6	57	2.4	52	2.4	57	2.4	60	2.2	210.0
223.1	26	2.4	31	2.9			45	2.6	50	2.6	52	2.4	48	2.2	53	2.0	56	2.2	223.1
236.2									45	2.4	47	2.2					51	2.0	236.2
Telescoping sequence %																			
Tel. 1	92						92						100						Tel. 1
Tel. 2	92						92						100						Tel. 2
Tel. 3	46						92						100						Tel. 3
Tel. 4	46						92						100						Tel. 4
Tel. 5	46						92						100						Tel. 5

View thousands of Crane Specifications on FreeCraneSpecs.com

ATF 130G-5 TADANO-Load rating chart

Counterweight 69,224lbs

Working radius [ft]	Lifting capacities in 1,000 lbs according per SAE J765 on fly jib 12.5 ft On outriggers, 360° working area **Outrigger base 24.61 ft** Boom length 42.0 ft Fly jib 12.5 ft offset						Boom length 42.0 ft to 84.5 ft Fly jib 12.5 ft offset						Boom length 42.0 ft to 112.9 ft Fly jib 12.5 ft offset						Working radius [ft]
	0°		20°		40°		0°		20°		40°		0°		20°		40°		
	∠°		∠°		∠°		∠°		∠°		∠°		∠°		∠°		∠°		
9.8	73	88.2	77	72.1															9.8
11.5	72	88.2	75	69.0	77	55.6													11.5
13.1	70	88.2	73	66.1	75	54.0	79	77.2											13.1
14.8	68	85.8	71	63.7	74	52.5	78	77.2	80	75.8									14.8
16.4	66	81.1	69	61.3	72	51.1	77	77.2	79	73.9									16.4
19.7	62	73.4	65	57.3	67	48.9	76	77.2	77	70.3	79	55.1	79	48.3					19.7
23.0	58	67.0	61	53.8	63	47.0	74	77.2	75	67.0	77	53.4	78	45.2	79	40.6	80	36.8	23.0
26.2	54	61.7	57	50.9	59	45.2	72	77.2	73	64.2	75	51.8	76	42.8	78	38.6	79	35.3	26.2
29.5	49	57.3	52	48.5	54	43.9	70	77.2	71	61.5	72	50.5	75	40.6	76	36.8	77	34.0	29.5
32.8	44	53.6	47	46.3	49	43.0	68	77.2	69	59.1	70	49.2	73	38.6	75	35.3	76	32.6	32.8
36.1	38	50.5	41	44.5	43	42.3	65	73.9	67	57.1	68	48.1	72	36.8	73	33.7	74	31.5	36.1
39.4	32	47.6	35	43.2			63	65.9	65	55.1	66	47.0	70	35.3	71	32.6	72	30.4	39.4
45.9	11	44.1					59	51.6	60	51.6	61	45.2	67	32.6	68	30.4	69	28.7	45.9
52.5							54	41.4	55	42.3	56	42.5	64	30.6	65	28.4	66	26.9	52.5
59.1							49	34.2	50	34.8	51	35.1	60	28.7	61	26.9	62	25.8	59.1
65.6							43	28.7	45	29.1	45	29.3	57	27.1	58	25.6	59	24.7	65.6
72.2							37	24.3	38	24.7	39	24.7	53	26.0	54	24.5	55	23.6	72.2
78.7							29	20.7	30	20.9			49	22.7	50	23.1	51	22.9	78.7
85.3							18	17.9					45	19.8	46	20.3	46	20.3	85.3
91.9													40	17.2	41	17.6			91.9
98.4													35	15.0	36	15.2			98.4
105.0													28	13.0	29	13.2			105.0
111.5													20	11.5					111.5
118.1																			118.1
124.7																			124.7
131.2																			131.2
144.4																			144.4
157.5																			157.5
170.6																			170.6
183.7																			183.7
196.8																			196.8
210.0																			210.0
223.1																			223.1
Telescoping sequence %																			
Tel. 1	0						46						46						Tel. 1
Tel. 2	0						46						46						Tel. 2
Tel. 3	0						46						46						Tel. 3
Tel. 4	0						0						46						Tel. 4
Tel. 5	0						0						46						Tel. 5

Working radius [ft]	Lifting capacities in 1,000 lbs according per SAE J765 on fly jib 12.5 ft On outriggers, 360° working area **Outrigger base 24.61 ft** Boom length 42.0 ft to 141.2 ft Fly jib 12.5 ft offset						Boom length 42.0 ft to 183.7 ft Fly jib 12.5 ft offset						Boom length 42.0 ft to 196.8 ft Fly jib 12.5 ft offset						Working radius [ft]
	0°		20°		40°		0°		20°		40°		0°		20°		40°		
	∠°		∠°		∠°		∠°		∠°		∠°		∠°		∠°		∠°		
9.8																			9.8
11.5																			11.5
13.1																			13.1
14.8																			14.8
16.4																			16.4
19.7																			19.7
23.0																			23.0
26.2																			26.2
29.5	79	36.6	80	33.1	80	31.1													29.5
32.8	77	34.8	78	31.7	79	30.0													32.8
36.1	76	33.5	77	30.6	78	28.9													36.1
39.4	75	32.2	76	29.5	77	28.0	79	19.8	80	19.8									39.4
45.9	73	29.8	74	27.6	75	26.2	77	19.8	78	19.4	79	18.7	78	17.2	79	17.2	80	17.2	45.9
52.5	70	27.8	71	26.0	72	24.9	76	19.2	77	18.3	77	17.9	77	17.2	78	16.8	78	16.3	52.5
59.1	68	26.2	69	24.5	69	23.6	74	18.1	75	17.4	75	17.0	75	16.5	76	15.9	77	15.4	59.1
65.6	65	24.9	66	23.4	67	22.7	72	17.0	73	16.5	73	16.1	74	15.7	74	15.2	75	14.8	65.6
72.2	62	23.6	63	22.3	64	21.6	70	16.1	71	15.7	71	15.4	72	14.8	73	14.3	73	14.1	72.2
78.7	59	21.4	60	21.4	61	20.9	68	15.2	69	15.0	69	14.8	70	14.1	71	13.7	71	13.4	78.7
85.3	56	18.5	57	19.0	58	19.2	66	14.3	67	14.1	67	13.9	68	13.4	69	13.0	70	13.0	85.3
91.9	53	15.9	54	16.1	55	16.5	64	13.7	65	13.4	65	13.2	66	12.8	67	12.6	68	12.3	91.9
98.4	50	13.4	51	13.9	52	14.1	62	13.0	63	12.8	63	12.6	64	12.1	65	11.9	66	11.7	98.4
105.0	47	11.7	48	11.9	48	12.1	60	12.3	61	12.1	61	11.9	62	11.5	63	11.2	64	11.2	105.0
111.5	43	9.9	44	10.1	44	10.4	57	11.5	58	11.5	59	11.5	60	11.0	61	10.8	62	10.8	111.5
118.1	39	8.4	40	8.6			55	9.9	56	10.1	56	10.4	58	9.9	59	10.1	60	10.1	118.1
124.7	34	7.3	35	7.3			53	8.6	54	8.8	54	9.0	56	8.6	57	8.8	57	9.0	124.7
131.2	29	6.2	30	6.2			50	7.5	51	7.7	51	7.7	54	7.5	55	7.7	55	7.7	131.2
144.4	11	4.2					44	5.5	45	5.7	45	5.7	49	5.5	50	5.7	50	5.7	144.4
157.5							38	4.0	38	4.0			44	4.0	44	4.0			157.5
170.6							30	2.6	30	2.6			37	2.4	38	2.6			170.6
183.7																			183.7
196.8																			196.8
210.0																			210.0
223.1																			223.1
Telescoping sequence %																			
Tel. 1	92						92						100						Tel. 1
Tel. 2	92						92						100						Tel. 2
Tel. 3	46						92						100						Tel. 3
Tel. 4	46						92						100						Tel. 4
Tel. 5	46						92						100						Tel. 5

View thousands of Crane Specifications on FreeCraneSpecs.com

ATF 130G-5 TADANO-Load rating chart

Counterweight 69,224lbs

Working radius [ft]	Lifting capacities in 1,000 lbs according per SAE J765 on fly jib 33.5 ft On outriggers, 360° working area **Outrigger base 24.61 ft** Boom length 42.0 ft Fly jib 33.5 ft offset						Boom length 42.0 ft to 84.5 ft Fly jib 33.5 ft offset						Boom length 42.0 ft to 112.9 ft Fly jib 33.5 ft offset						Working radius [ft]
	0°		20°		40°		0°		20°		40°		0°		20°		40°		
	∠°		∠°		∠°		∠°		∠°		∠°		∠°		∠°		∠°		
9.8	76	33.1																	9.8
11.5	75	33.1																	11.5
13.1	74	33.1					80	33.1											13.1
14.8	73	33.1					79	33.1											14.8
16.4	71	33.1	79	31.1			78	33.1											16.4
19.7	69	33.1	77	28.7			77	33.1											19.7
23.0	66	33.1	74	26.7			75	33.1	80	32.4			79	29.5					23.0
26.2	63	33.1	71	24.9	78	20.1	74	33.1	79	30.6			77	29.5					26.2
29.5	60	30.4	68	23.4	75	19.2	72	33.1	77	29.1			76	29.5	80	26.9			29.5
32.8	57	27.8	65	22.0	72	18.5	70	33.1	75	27.8	80	20.5	75	29.5	79	25.8			32.8
36.1	54	25.1	62	20.7	69	17.6	69	33.1	74	26.5	78	19.8	74	29.5	78	24.7			36.1
39.4	51	22.9	59	19.8	65	17.2	67	33.1	72	25.4	76	19.4	72	29.3	76	23.8	80	20.3	39.4
45.9	45	19.6	52	18.1	58	16.1	64	33.1	68	23.4	72	18.3	70	26.7	74	22.0	77	19.2	45.9
52.5	37	17.2	45	16.8	50	15.4	60	30.2	65	21.6	69	17.4	67	24.5	71	20.5	74	18.1	52.5
59.1	27	15.2	35	15.7			56	27.1	61	20.3	65	16.8	64	22.7	68	19.4	71	17.2	59.1
65.6	13	13.4					52	24.5	57	19.0	61	16.1	61	21.2	65	18.3	68	16.3	65.6
72.2							48	21.8	53	17.9	56	15.7	58	19.8	62	17.4	65	15.7	72.2
78.7							44	19.8	48	17.2	51	15.2	55	18.7	59	16.5	62	15.0	78.7
85.3							39	18.1	43	16.3	46	15.0	52	17.9	56	15.9	58	14.6	85.3
91.9							33	16.5	38	15.7			49	17.0	53	15.2	55	14.1	91.9
98.4							27	15.0	31	15.2			45	16.1	49	14.6	51	13.7	98.4
105.0							18	13.2	22	13.4			41	14.1	45	14.1	47	13.4	105.0
111.5													37	12.6	41	13.2	42	13.0	111.5
118.1													33	11.0	36	11.7			118.1
124.7													27	9.7	30	10.1			124.7
131.2													20	8.6	23	9.0			131.2
144.4																			144.4
157.5																			157.5
170.6																			170.6
183.7																			183.7
196.8																			196.8
210.0																			210.0
223.1																			223.1
Telescoping sequence %																			
Tel. 1	0						46						46						Tel. 1
Tel. 2	0						46						46						Tel. 2
Tel. 3	0						46						46						Tel. 3
Tel. 4	0						0						46						Tel. 4
Tel. 5	0						0						46						Tel. 5

Working radius [ft]	Lifting capacities in 1,000 lbs according per SAE J765 on fly jib 33.5 ft On outriggers, 360° working area **Outrigger base 24.61 ft** Boom length 42.0 ft to 141.2 ft Fly jib 33.5 ft offset						Boom length 42.0 ft to 183.7 ft Fly jib 33.5 ft offset						Boom length 42.0 ft to 196.8 ft Fly jib 33.5 ft offset						Working radius [ft]
	0°		20°		40°		0°		20°		40°		0°		20°		40°		
	∠°		∠°		∠°		∠°		∠°		∠°		∠°		∠°		∠°		
9.8																			9.8
11.5																			11.5
13.1																			13.1
14.8																			14.8
16.4																			16.4
19.7																			19.7
23.0																			23.0
26.2	80	23.4																	26.2
29.5	79	23.4																	29.5
32.8	78	23.4																	32.8
36.1	77	23.4																	36.1
39.4	76	23.4	80	22.3			80	14.1					80	12.6					39.4
45.9	74	23.4	78	20.7	80	18.1	78	14.1					79	12.6					45.9
52.5	72	23.1	75	19.6	78	17.0	77	14.1	80	14.1			78	12.6	80	12.6			52.5
59.1	70	21.8	73	18.3	76	16.3	75	14.1	78	13.4	80	12.6	76	12.6	79	12.3			59.1
65.6	68	20.5	71	17.4	73	15.7	74	14.1	76	12.8	78	11.9	75	12.6	77	11.9	79	11.0	65.6
72.2	66	19.4	69	16.5	71	15.0	72	13.7	75	12.1	77	11.5	73	12.6	76	11.2	78	10.6	72.2
78.7	63	18.3	66	15.9	69	14.3	70	13.0	73	11.7	75	11.0	72	11.9	74	10.8	76	10.1	78.7
85.3	61	17.4	64	15.2	66	13.9	68	12.3	71	11.2	73	10.6	70	11.5	73	10.4	75	9.9	85.3
91.9	58	16.5	61	14.6	64	13.4	67	11.9	69	10.8	71	10.1	69	11.0	71	9.9	73	9.5	91.9
98.4	56	14.6	59	14.1	61	13.0	65	11.5	68	10.4	69	9.9	67	10.4	69	9.7	71	9.3	98.4
105.0	53	12.6	56	13.7	58	12.6	63	10.8	66	10.1	67	9.5	65	9.9	68	9.3	69	8.8	105.0
111.5	50	10.8	53	11.7	55	12.3	61	10.4	64	9.7	66	9.3	64	9.7	66	9.0	68	8.6	111.5
118.1	47	9.5	50	10.1	52	10.8	59	10.1	62	9.5	63	9.0	62	9.3	64	8.8	66	8.4	118.1
124.7	44	8.2	47	8.8	49	9.3	57	8.8	60	9.0	61	8.8	60	8.8	63	8.4	64	8.2	124.7
131.2	41	7.1	44	7.5	45	7.9	55	7.7	58	8.8	59	8.6	58	7.7	61	8.2	62	7.9	131.2
144.4	33	5.1	36	5.5			51	5.7	53	6.6	55	7.1	54	5.7	57	6.6	58	7.1	144.4
157.5	22	3.5	25	3.7			46	4.2	48	4.9	49	5.3	50	4.0	52	4.9	53	5.3	157.5
170.6							40	2.9	43	3.5			45	2.6	47	3.5	48	3.7	170.6
183.7									36	2.2					42	2.2			183.7
196.8																			196.8
210.0																			210.0
223.1																			223.1
Telescoping sequence %																			
Tel. 1	92						92						100						Tel. 1
Tel. 2	92						92						100						Tel. 2
Tel. 3	46						92						100						Tel. 3
Tel. 4	46						92						100						Tel. 4
Tel. 5	46						92						100						Tel. 5

View thousands of Crane Specifications on FreeCraneSpecs.com

ATF 130G-5 TADANO-Load rating chart

Counterweight 69,224lbs

Working radius [ft]	Lifting capacities in 1,000 lbs according per SAE J765 on fly jib 59.1 ft On outriggers, 360° working area **Outrigger base 24.61 ft** Boom length 42.0 ft Fly jib 59.1 ft offset						Boom length 42.0 ft to 84.5 ft Fly jib 59.1 ft offset						Boom length 42.0 ft to 112.9 ft Fly jib 59.1 ft offset						Working radius [ft]
	0°		20°		40°		0°		20°		40°		0°		20°		40°		
	∠°		∠°		∠°		∠°		∠°		∠°		∠°		∠°		∠°		
9.8	80	17.2																	9.8
11.5	79	17.2																	11.5
13.1	78	17.2																	13.1
14.8	77	17.2																	14.8
16.4	76	17.2					80	16.3											16.4
19.7	74	17.2					79	16.3											19.7
23.0	73	16.5					78	16.3					80	13.0					23.0
26.2	71	15.7					77	16.3					79	13.0					26.2
29.5	69	14.8	80	11.5			75	16.3					78	13.0					29.5
32.8	67	13.9	78	11.0			74	15.7					77	13.0					32.8
36.1	65	13.2	76	10.4			73	15.2					76	13.0					36.1
39.4	63	12.6	74	9.9			71	14.6	79	10.6			75	13.0					39.4
45.9	58	11.2	70	9.0	79	7.7	69	13.4	77	9.7			73	13.0	79	9.5			45.9
52.5	54	10.1	65	8.4	75	7.3	66	12.6	74	9.3	80	7.5	71	12.6	77	9.0			52.5
59.1	49	9.3	60	7.7	70	6.8	63	11.7	71	8.6	77	7.1	69	11.9	75	8.6	80	7.1	59.1
65.6	44	8.6	55	7.3	64	6.6	60	10.8	68	8.2	74	6.8	66	11.2	73	8.2	78	6.6	65.6
72.2	38	7.9	49	6.8	58	6.4	57	10.1	65	7.7	71	6.6	64	10.6	70	7.9	75	6.4	72.2
78.7	32	7.3	43	6.6	50	6.2	54	9.5	62	7.3	67	6.4	62	10.1	68	7.5	73	6.4	78.7
85.3	24	6.8	35	6.4			51	8.8	58	7.1	64	6.2	59	9.5	65	7.3	70	6.2	85.3
91.9	10	6.6					47	8.4	55	6.8	60	6.0	57	9.0	62	6.8	67	6.0	91.9
98.4							43	7.9	51	6.6	56	6.0	54	8.6	60	6.6	64	5.7	98.4
105.0							39	7.5	47	6.4	51	5.7	51	8.2	57	6.4	61	5.7	105.0
111.5							35	7.3	42	6.2	46	5.7	48	7.9	54	6.4	58	5.5	111.5
118.1							30	7.1	37	6.2			45	7.5	51	6.2	55	5.5	118.1
124.7							24	6.6	31	6.0			42	7.3	48	6.0	51	5.5	124.7
131.2							16	6.6					39	7.1	44	6.0	47	5.5	131.2
144.4													31	6.6	35	5.7			144.4
157.5													19	6.4					157.5
170.6																			170.6
183.7																			183.7
196.8																			196.8
210.0																			210.0
223.1																			223.1
Telescoping sequence %																			
Tel. 1	0						46						46						Tel. 1
Tel. 2	0						46						46						Tel. 2
Tel. 3	0						46						46						Tel. 3
Tel. 4	0						0						46						Tel. 4
Tel. 5	0						0						46						Tel. 5

Working radius [ft]	Lifting capacities in 1,000 lbs according per SAE J765 on fly jib 59.1 ft On outriggers, 360° working area **Outrigger base 24.61 ft** Boom length 42.0 ft to 141.2 ft Fly jib 59.1 ft offset						Boom length 42.0 ft to 183.7 ft Fly jib 59.1 ft offset						Boom length 42.0 ft to 196.8 ft Fly jib 59.1 ft offset						Working radius [ft]
	0°		20°		40°		0°		20°		40°		0°		20°		40°		
	∠°		∠°		∠°		∠°		∠°		∠°		∠°		∠°		∠°		
9.8																			9.8
11.5																			11.5
13.1																			13.1
14.8																			14.8
16.4																			16.4
19.7																			19.7
23.0																			23.0
26.2																			26.2
29.5																			29.5
32.8	80	12.1																	32.8
36.1	79	12.1																	36.1
39.4	78	12.1																	39.4
45.9	76	12.1					79	8.6					80	7.9					45.9
52.5	74	12.1	80	9.0			78	8.6					79	7.9					52.5
59.1	73	11.9	78	8.6			77	8.6					78	7.9					59.1
65.6	71	11.5	76	8.2	80	6.6	75	8.6	80	7.7			76	7.9					65.6
72.2	69	10.8	74	7.9	78	6.4	74	8.6	78	7.5			75	7.9	79	7.3			72.2
78.7	67	10.4	72	7.5	76	6.2	73	8.6	77	7.3	80	6.0	74	7.9	78	7.1			78.7
85.3	65	9.9	70	7.3	74	6.0	71	8.6	75	7.1	79	5.7	73	7.9	77	6.8	80	5.7	85.3
91.9	63	9.5	68	7.1	72	6.0	70	8.6	74	6.6	77	5.5	71	7.9	75	6.6	78	5.5	91.9
98.4	61	9.0	66	6.8	70	5.7	68	8.6	72	6.6	75	5.5	70	7.9	74	6.4	77	5.3	98.4
105.0	59	8.6	64	6.6	67	5.7	67	8.4	71	6.4	74	5.3	69	7.9	72	6.2	75	5.3	105.0
111.5	57	8.4	61	6.4	65	5.5	65	8.2	69	6.2	72	5.3	67	7.5	71	6.0	74	5.1	111.5
118.1	54	7.9	59	6.2	63	5.5	64	7.9	67	6.0	70	5.1	66	7.3	69	6.0	72	5.1	118.1
124.7	52	7.7	57	6.0	60	5.3	62	7.5	66	5.7	68	5.1	64	7.1	68	5.7	70	4.9	124.7
131.2	50	7.5	54	6.0	57	5.3	60	7.3	64	5.7	67	5.1	63	6.8	66	5.7	69	4.9	131.2
144.4	45	6.2	49	5.7	52	5.3	57	6.6	60	5.5	63	4.9	60	6.4	63	5.3	65	4.6	144.4
157.5	39	4.6	43	5.5	45	5.3	53	5.1	56	5.3	59	4.6	56	4.9	60	5.1	62	4.6	157.5
170.6	32	3.3	36	4.0			49	3.7	52	4.4	54	4.6	52	3.5	56	4.4	58	4.6	170.6
183.7	22	2.2					44	2.6	48	3.3	49	3.5	48	2.4	52	3.1	53	3.5	183.7
196.8									42	2.2					47	2.0	48	2.4	196.8
210.0																			210.0
223.1																			223.1
Telescoping sequence %																			
Tel. 1	92						92						100						Tel. 1
Tel. 2	92						92						100						Tel. 2
Tel. 3	46						92						100						Tel. 3
Tel. 4	46						92						100						Tel. 4
Tel. 5	46						92						100						Tel. 5

View thousands of Crane Specifications on FreeCraneSpecs.com

ATF 130G-5 TADANO-Load rating chart

Counterweight 69,224lbs

Working radius [ft]	Lifting capacities in 1,000 lbs according per SAE J765 on fly jib 82.0 ft On outriggers, 360° working area **Outrigger base 24.61 ft** Boom length 42.0 ft Fly jib 82.0 ft offset 0°		20°		40°		Boom length 42.0 ft to 84.5 ft Fly jib 82.0 ft offset 0°		20°		40°		Boom length 42.0 ft to 112.9 ft Fly jib 82.0 ft offset 0°		20°		40°		Working radius [ft]
	∠°		∠°		∠°		∠°		∠°		∠°		∠°		∠°		∠°		
9.8																			9.8
11.5																			11.5
13.1																			13.1
14.8	80	11.2																	14.8
16.4	79	11.2																	16.4
19.7	78	11.2																	19.7
23.0	76	11.2					80	10.8											23.0
26.2	75	11.2					79	10.8											26.2
29.5	73	11.2					78	10.8					80	8.8					29.5
32.8	72	11.2					77	10.8					79	8.8					32.8
36.1	70	11.2					76	10.8					78	8.8					36.1
39.4	69	11.2					75	10.8					77	8.8					39.4
45.9	66	10.8	78	9.9			72	10.8					75	8.8					45.9
52.5	62	10.4	75	8.8			70	10.6	79	9.5			74	8.8					52.5
59.1	59	9.7	71	7.9			68	10.4	77	9.0			72	8.8	80	8.4			59.1
65.6	55	8.4	67	7.3	79	6.2	65	9.9	74	8.6			70	8.8	78	8.2			65.6
72.2	51	7.5	64	6.6	74	5.7	63	9.7	72	7.9	80	6.2	68	8.8	76	7.9			72.2
78.7	47	6.6	59	6.2	70	5.5	60	9.3	69	7.5	77	6.0	66	8.8	74	7.5	80	6.0	78.7
85.3	43	6.0	55	5.7	65	5.1	58	8.8	67	7.1	74	5.5	64	8.6	71	7.3	78	5.7	85.3
91.9	38	5.3	50	5.3	60	4.9	55	8.2	64	6.6	71	5.3	62	8.4	69	7.1	75	5.5	91.9
98.4	33	4.9	45	5.1	54	4.6	52	7.3	61	6.2	68	5.1	60	8.2	67	6.8	73	5.3	98.4
105.0	26	4.4	38	4.6			49	6.8	58	6.0	65	5.1	57	7.9	65	6.4	70	5.1	105.0
111.5	18	4.0					46	6.2	55	5.5	61	4.9	55	7.7	62	6.2	68	5.1	111.5
118.1							43	5.7	51	5.3	57	4.6	52	7.1	60	6.0	65	4.9	118.1
124.7							39	5.3	48	5.1	53	4.4	50	6.6	57	5.5	62	4.9	124.7
131.2							35	4.9	44	4.9	49	4.4	47	6.2	54	5.3	59	4.6	131.2
144.4							26	4.2	34	4.4			42	5.3	48	5.1	53	4.4	144.4
157.5							11	3.7					35	4.6	42	4.6	45	4.4	157.5
170.6													27	4.2	33	4.4			170.6
183.7													15	3.7					183.7
196.8																			196.8
210.0																			210.0
223.1																			223.1
Telescoping sequence %																			
Tel. 1	0						46						46						Tel. 1
Tel. 2	0						46						46						Tel. 2
Tel. 3	0						46						46						Tel. 3
Tel. 4	0						0						46						Tel. 4
Tel. 5	0						0						46						Tel. 5

Working radius [ft]	Lifting capacities in 1,000 lbs according per SAE J765 on fly jib 82.0 ft On outriggers, 360° working area **Outrigger base 24.61 ft** Boom length 42.0 ft to 141.2 ft Fly jib 82.0 ft offset 0°		20°		40°		Boom length 42.0 ft to 183.7 ft Fly jib 82.0 ft offset 0°		20°		40°		Boom length 42.0 ft to 196.8 ft Fly jib 82.0 ft offset 0°		20°		40°		Working radius [ft]
	∠°		∠°		∠°		∠°		∠°		∠°		∠°		∠°		∠°		
9.8																			9.8
11.5																			11.5
13.1																			13.1
14.8																			14.8
16.4																			16.4
19.7																			19.7
23.0																			23.0
26.2																			26.2
29.5																			29.5
32.8																			32.8
36.1	80	8.4																	36.1
39.4	79	8.4																	39.4
45.9	78	8.4					80	6.4											45.9
52.5	76	8.4					79	6.4					80	6.0					52.5
59.1	75	8.4					78	6.4					79	6.0					59.1
65.6	73	8.4	80	7.9			77	6.4					78	6.0					65.6
72.2	72	8.4	78	7.7			76	6.4					77	6.0					72.2
78.7	70	8.4	77	7.5			74	6.4	80	6.4			76	6.0					78.7
85.3	68	8.4	75	7.3	80	6.0	73	6.4	79	6.4			74	6.0	80	6.0			85.3
91.9	67	8.2	73	7.1	78	5.7	72	6.4	78	6.4			73	6.0	79	6.0			91.9
98.4	65	8.2	71	6.8	76	5.5	71	6.4	76	6.2	81	5.5	72	6.0	78	5.7			98.4
105.0	63	7.9	69	6.6	75	5.3	69	6.4	75	6.0	79	5.3	71	6.0	76	5.5	80	5.1	105.0
111.5	61	7.7	67	6.4	72	5.3	68	6.4	74	5.7	78	5.3	70	6.0	75	5.3	79	5.1	111.5
118.1	59	7.5	65	6.2	70	5.1	67	6.2	72	5.5	76	5.1	68	5.7	74	5.1	77	4.9	118.1
124.7	57	7.3	63	6.0	68	4.9	65	6.0	71	5.3	75	4.9	67	5.5	72	5.1	76	4.6	124.7
131.2	55	7.1	61	5.7	66	4.9	64	5.7	69	5.1	73	4.9	66	5.3	71	4.9	74	4.4	131.2
144.4	51	6.4	57	5.5	61	4.6	61	5.5	66	4.9	69	4.4	63	5.1	68	4.4	71	4.2	144.4
157.5	47	5.3	52	5.1	56	4.4	58	5.1	63	4.4	66	4.2	60	4.6	65	4.2	68	4.0	157.5
170.6	42	3.7	47	4.9	50	4.4	54	4.0	59	4.2	62	4.0	57	3.7	62	3.7	65	3.7	170.6
183.7	36	2.6	41	3.5			51	2.9	55	3.7	58	3.7	54	2.6	58	3.5	61	3.3	183.7
196.8			33	2.2					51	2.6	53	3.3			54	2.6	57	3.1	196.8
210.0											48	2.2					52	2.0	210.0
223.1																			223.1
Telescoping sequence %																			
Tel. 1	92						92						100						Tel. 1
Tel. 2	92						92						100						Tel. 2
Tel. 3	46						92						100						Tel. 3
Tel. 4	46						92						100						Tel. 4
Tel. 5	46						92						100						Tel. 5

View thousands of Crane Specifications on FreeCraneSpecs.com

ATF 130G-5 TADANO-Load rating chart

Counterweight 69,224lbs

Working radius [ft]	Lifting capacities in 1,000 lbs according per SAE J765 on fly jib 105.0 ft On outriggers, 360° working area **Outrigger base 24.61 ft** Boom length 42.0 ft Fly jib 105.0 ft offset						Boom length 42.0 ft to 84.5 ft Fly jib 105.0 ft offset						Boom length 42.0 ft to 112.9 ft Fly jib 105.0 ft offset						Working radius [ft]
	0°		20°		40°		0°		20°		40°		0°		20°		40°		
	∠°		∠°		∠°		∠°		∠°		∠°		∠°		∠°		∠°		
9.8																			9.8
11.5																			11.5
13.1																			13.1
14.8																			14.8
16.4																			16.4
19.7	80	7.7																	19.7
23.0	79	7.7																	23.0
26.2	77	7.7					80	7.3											26.2
29.5	76	7.7					80	7.3											29.5
32.8	75	7.7					79	7.3											32.8
36.1	74	7.7					78	7.3					80	6.2					36.1
39.4	73	7.7					77	7.3					79	6.2					39.4
45.9	70	7.7					75	7.3					77	6.2					45.9
52.5	67	7.7					73	7.3					75	6.2					52.5
59.1	65	7.7	78	6.8			71	7.3					74	6.2					59.1
65.6	62	7.1	75	6.2			69	7.3	79	6.8			72	6.2	82	6.2			65.6
72.2	59	6.2	72	5.7			67	7.3	77	6.4			70	6.2	80	6.2			72.2
78.7	56	5.5	69	5.1			65	7.3	75	6.0			69	6.2	78	6.0			78.7
85.3	52	4.9	66	4.9	78	4.2	63	6.8	73	5.5			67	6.2	76	5.5			85.3
91.9	49	4.4	63	4.4	75	4.0	60	6.2	70	5.1	79	4.2	65	6.2	74	5.5			91.9
98.4	46	4.0	59	4.2	71	3.5	58	5.5	68	4.9	77	4.0	64	6.2	72	5.3	80	4.0	98.4
105.0	42	3.5	55	3.7	66	3.5	56	5.1	66	4.6	74	3.7	62	6.2	70	4.9	78	3.7	105.0
111.5	38	3.1	51	3.5	62	3.3	53	4.6	63	4.4	72	3.5	60	5.7	68	4.6	76	3.7	111.5
118.1	33	2.9	46	3.3	56	3.1	50	4.2	60	4.2	69	3.3	58	5.3	66	4.4	73	3.5	118.1
124.7	28	2.6	41	3.1	50	3.1	48	4.0	58	4.0	66	3.3	55	4.9	64	4.2	71	3.3	124.7
131.2	21	2.4	33	3.1			45	3.5	55	3.7	63	3.1	53	4.4	62	4.0	69	3.3	131.2
144.4							39	3.1	49	3.3	55	3.1	49	4.0	57	3.7	64	3.1	144.4
157.5							32	2.6	41	3.1	46	2.9	44	3.3	52	3.3	58	2.9	157.5
170.6							23	2.4	31	2.9			38	3.1	46	3.1	51	2.9	170.6
183.7													32	2.6	39	3.1			183.7
196.8													24	2.4	30	2.9			196.8
210.0																			210.0
223.1																			223.1
Telescoping sequence %																			
Tel. 1	0						46						46						Tel. 1
Tel. 2	0						46						46						Tel. 2
Tel. 3	0						46						46						Tel. 3
Tel. 4	0						0						46						Tel. 4
Tel. 5	0						0						46						Tel. 5

Working radius [ft]	Lifting capacities in 1,000 lbs according per SAE J765 on fly jib 105.0 ft On outriggers, 360° working area **Outrigger base 24.61 ft** Boom length 42.0 ft to 141.2 ft Fly jib 105.0 ft offset						Boom length 42.0 ft to 183.7 ft Fly jib 105.0 ft offset						Boom length 42.0 ft to 196.8 ft Fly jib 105.0 ft offset						Working radius [ft]
	0°		20°		40°		0°		20°		40°		0°		20°		40°		
	∠°		∠°		∠°		∠°		∠°		∠°		∠°		∠°		∠°		
9.8																			9.8
11.5																			11.5
13.1																			13.1
14.8																			14.8
16.4																			16.4
19.7																			19.7
23.0																			23.0
26.2																			26.2
29.5																			29.5
32.8																			32.8
36.1																			36.1
39.4	80	6.0																	39.4
45.9	79	6.0																	45.9
52.5	78	6.0					80	4.6											52.5
59.1	76	6.0					79	4.6					80	4.4					59.1
65.6	75	6.0					78	4.6					79	4.4					65.6
72.2	74	6.0					77	4.6					78	4.4					72.2
78.7	72	6.0	80	5.7			76	4.6					77	4.4					78.7
85.3	71	6.0	79	5.5			75	4.6					76	4.4					85.3
91.9	69	6.0	77	5.3			74	4.6					75	4.4					91.9
98.4	68	6.0	75	5.1			73	4.6	80	4.4			74	4.4	80	4.2			98.4
105.0	66	6.0	74	5.1	80	4.0	71	4.6	78	4.4			73	4.4	79	4.2			105.0
111.5	65	6.0	72	4.9	78	3.7	70	4.6	77	4.2			72	4.4	78	4.0			111.5
118.1	63	5.7	70	4.6	77	3.5	69	4.6	76	4.2			71	4.4	77	4.0			118.1
124.7	61	5.5	69	4.6	75	3.5	68	4.6	74	4.0	79	3.5	69	4.4	76	4.0	80	3.5	124.7
131.2	60	5.3	67	4.4	73	3.3	67	4.6	73	4.0	78	3.5	68	4.2	74	3.7	79	3.5	131.2
144.4	56	4.9	63	4.0	69	3.3	64	4.4	70	3.7	75	3.3	66	4.0	72	3.5	76	3.3	144.4
157.5	52	4.2	59	3.7	65	3.1	61	4.0	67	3.5	72	3.1	63	3.7	69	3.3	73	3.1	157.5
170.6	48	3.7	55	3.5	60	2.9	58	3.7	64	3.3	68	3.1	61	3.5	66	3.1	70	2.9	170.6
183.7	44	3.1	50	3.3	55	2.9	55	3.1	61	3.1	65	2.9	58	2.9	63	2.9	67	2.6	183.7
196.8	39	2.2	45	3.1	48	2.9	52	2.2	58	2.9	61	2.6			60	2.6	64	2.4	196.8
210.0			39	2.0					54	2.2	57	2.4			57	2.2	60	2.2	210.0
223.1											52	2.0					56	2.0	223.1
Telescoping sequence %																			
Tel. 1	92						92						100						Tel. 1
Tel. 2	92						92						100						Tel. 2
Tel. 3	46						92						100						Tel. 3
Tel. 4	46						92						100						Tel. 4
Tel. 5	46						92						100						Tel. 5

View thousands of Crane Specifications on FreeCraneSpecs.com

ATF 130G-5 TADANO-Load rating chart

Counterweight 0lbs

Working radius [ft]	Lifting capacities in 1,000 lbs according per SAE J765 on fly jib 12.5 ft On outriggers, 360° working area **Outrigger base 24.61 ft** Boom length 42.0 ft Fly jib 12.5 ft offset						Boom length 42.0 ft to 84.5 ft Fly jib 12.5 ft offset						Boom length 42.0 ft to 112.9 ft Fly jib 12.5 ft offset						Working radius [ft]
	0°		20°		40°		0°		20°		40°		0°		20°		40°		
	∠°		∠°		∠°		∠°		∠°		∠°		∠°		∠°		∠°		
9.8	73	88.2	77	72.1															9.8
11.5	72	88.2	75	69.0	77	55.6													11.5
13.1	70	88.2	73	66.1	75	54.0	79	77.2											13.1
14.8	68	85.8	71	63.7	74	52.5	78	77.2	80	75.8									14.8
16.4	66	81.1	69	61.3	72	51.1	77	77.2	79	73.9									16.4
19.7	62	73.4	65	57.3	67	48.9	76	77.2	77	70.3	79	55.1	79	48.3					19.7
23.0	58	67.0	61	53.8	63	47.0	74	62.2	75	64.6	77	53.4	78	45.2	79	40.6	80	36.8	23.0
26.2	54	61.7	57	50.9	59	45.2	72	50.3	73	52.2	75	51.8	76	42.8	78	38.6	79	35.3	26.2
29.5	49	50.0	52	48.5	54	43.9	70	41.4	71	43.2	72	44.8	75	40.3	76	36.8	77	34.0	29.5
32.8	44	41.2	47	42.1	49	42.8	68	34.8	69	36.2	70	37.5	73	34.4	75	35.3	76	32.6	32.8
36.1	38	34.4	41	35.3	43	35.7	65	29.5	67	30.9	68	31.7	72	29.8	73	30.9	74	31.5	36.1
39.4	32	29.3	35	30.0			63	25.1	65	26.2	66	27.3	70	25.8	71	26.9	72	27.8	39.4
45.9	11	21.6					59	18.7	60	19.6	61	20.3	67	19.8	68	20.7	69	21.4	45.9
52.5							54	13.4	55	14.3	56	14.8	64	15.4	65	16.1	66	16.8	52.5
59.1							49	9.5	50	10.1	51	10.6	60	11.9	61	12.6	62	13.0	59.1
65.6							43	6.6	45	7.1	45	7.3	57	9.0	58	9.7	59	10.1	65.6
72.2							37	4.4	38	4.6	39	4.9	53	6.6	54	7.3	55	7.5	72.2
78.7							29	2.4	30	2.6			49	4.9	50	5.3	51	5.5	78.7
85.3													45	3.1	46	3.5	46	3.7	85.3
91.9													40	2.0	41	2.2			91.9
98.4																			98.4
105.0																			105.0
111.5																			111.5
118.1																			118.1
124.7																			124.7
131.2																			131.2
144.4																			144.4
Telescoping sequence %																			
Tel. 1	0						46						46						Tel. 1
Tel. 2	0						46						46						Tel. 2
Tel. 3	0						46						46						Tel. 3
Tel. 4	0						0						46						Tel. 4
Tel. 5	0						0						46						Tel. 5

Working radius [ft]	Lifting capacities in 1,000 lbs according per SAE J765 on fly jib 12.5 ft On outriggers, 360° working area **Outrigger base 24.61 ft** Boom length 42.0 ft to 141.2 ft Fly jib 12.5 ft offset						Boom length 42.0 ft to 183.7 ft Fly jib 12.5 ft offset						Boom length 42.0 ft to 196.8 ft Fly jib 12.5 ft offset						Working radius [ft]
	0°		20°		40°		0°		20°		40°		0°		20°		40°		
	∠°		∠°		∠°		∠°		∠°		∠°		∠°		∠°		∠°		
9.8																			9.8
11.5																			11.5
13.1																			13.1
14.8																			14.8
16.4																			16.4
19.7																			19.7
23.0																			23.0
26.2																			26.2
29.5	79	34.4	80	33.1	80	31.1													29.5
32.8	77	29.3	78	30.6	79	30.0													32.8
36.1	76	25.1	77	26.5	78	27.6													36.1
39.4	75	21.8	76	22.9	77	23.8	79	19.8	80	19.8									39.4
45.9	73	16.3	74	17.2	75	18.1	77	16.3	78	17.2	79	17.9	78	15.7	79	16.5	80	17.2	45.9
52.5	70	12.3	71	13.2	72	13.9	76	12.8	77	13.4	77	13.9	77	12.3	78	13.0	78	13.4	52.5
59.1	68	9.3	69	9.9	69	10.6	74	9.9	75	10.6	75	11.0	75	9.5	76	10.1	77	10.6	59.1
65.6	65	6.8	66	7.3	67	7.9	72	7.5	73	8.2	73	8.6	74	7.3	74	7.7	75	8.2	65.6
72.2	62	4.9	63	5.3	64	5.7	70	5.7	71	6.2	71	6.6	72	5.5	73	6.0	73	6.2	72.2
78.7			60	3.5	61	4.0	68	4.2	69	4.6	69	4.9			71	4.4	71	4.6	78.7
85.3																			85.3
91.9																			91.9
98.4																			98.4
105.0																			105.0
111.5																			111.5
118.1																			118.1
124.7																			124.7
131.2																			131.2
144.4																			144.4
Telescoping sequence %																			
Tel. 1	92						92						100						Tel. 1
Tel. 2	92						92						100						Tel. 2
Tel. 3	46						92						100						Tel. 3
Tel. 4	46						92						100						Tel. 4
Tel. 5	46						92						100						Tel. 5

View thousands of Crane Specifications on FreeCraneSpecs.com

ATF 130G-5 TADANO-Load rating chart

Counterweight 0lbs

Working radius [ft]	Lifting capacities in 1,000 lbs according per SAE J765 on fly jib 33.5 ft On outriggers, 360° working area **Outrigger base 24.61 ft** Boom length 42.0 ft Fly jib 33.5 ft offset						Boom length 42.0 ft to 84.5 ft Fly jib 33.5 ft offset						Boom length 42.0 ft to 112.9 ft Fly jib 33.5 ft offset						Working radius [ft]
	0°		20°		40°		0°		20°		40°		0°		20°		40°		
	∠°		∠°		∠°		∠°		∠°		∠°		∠°		∠°		∠°		
9.8	76	33.1																	9.8
11.5	75	33.1																	11.5
13.1	74	33.1					80	33.1											13.1
14.8	73	33.1					79	33.1											14.8
16.4	71	33.1	79	31.1			78	33.1											16.4
19.7	69	33.1	77	28.7			77	33.1											19.7
23.0	66	33.1	74	26.7			75	33.1	80	32.4			79	29.5					23.0
26.2	63	33.1	71	24.9	78	20.1	74	33.1	79	30.6			77	29.5					26.2
29.5	60	30.4	68	23.4	75	19.2	72	33.1	77	29.1			76	29.5	80	26.9			29.5
32.8	57	27.8	65	22.0	72	18.5	70	33.1	75	27.8	80	20.5	75	29.5	79	25.8			32.8
36.1	54	25.1	62	20.7	69	17.6	69	30.0	74	26.5	78	19.8	74	29.1	78	24.7			36.1
39.4	51	22.9	59	19.8	65	17.2	67	26.0	72	25.4	76	19.4	72	25.6	76	23.8	80	20.3	39.4
45.9	45	19.6	52	18.1	58	16.1	64	19.8	68	22.7	72	18.3	70	19.8	74	22.0	77	19.2	45.9
52.5	37	17.2	45	16.8	50	15.4	60	15.4	65	17.9	69	17.4	67	15.7	71	18.1	74	18.1	52.5
59.1	27	15.2	35	15.7			56	11.9	61	13.9	65	15.7	64	12.6	68	14.6	71	16.1	59.1
65.6	13	12.8					52	8.8	57	10.6	61	11.9	61	9.9	65	11.7	68	13.2	65.6
72.2							48	6.4	53	7.9	56	9.0	58	7.9	62	9.5	65	10.6	72.2
78.7							44	4.6	48	5.7	51	6.6	55	6.0	59	7.3	62	8.4	78.7
85.3							39	3.1	43	4.0	46	4.9	52	4.4	56	5.7	58	6.4	85.3
91.9									38	2.6			49	3.1	53	4.2	55	4.9	91.9
98.4													45	2.0	49	2.9	51	3.5	98.4
105.0																	47	2.2	105.0
111.5																			111.5
118.1																			118.1
124.7																			124.7
131.2																			131.2
144.4																			144.4
Telescoping sequence %																			
Tel. 1	0						46						46						Tel. 1
Tel. 2	0						46						46						Tel. 2
Tel. 3	0						46						46						Tel. 3
Tel. 4	0						0						46						Tel. 4
Tel. 5	0						0						46						Tel. 5

Working radius [ft]	Lifting capacities in 1,000 lbs according per SAE J765 on fly jib 33.5 ft On outriggers, 360° working area **Outrigger base 24.61 ft** Boom length 42.0 ft to 141.2 ft Fly jib 33.5 ft offset						Boom length 42.0 ft to 183.7 ft Fly jib 33.5 ft offset						Boom length 42.0 ft to 196.8 ft Fly jib 33.5 ft offset						Working radius [ft]
	0°		20°		40°		0°		20°		40°		0°		20°		40°		
	∠°		∠°		∠°		∠°		∠°		∠°		∠°		∠°		∠°		
9.8																			9.8
11.5																			11.5
13.1																			13.1
14.8																			14.8
16.4																			16.4
19.7																			19.7
23.0																			23.0
26.2	80	23.4																	26.2
29.5	79	23.4																	29.5
32.8	78	23.4																	32.8
36.1	77	23.4																	36.1
39.4	76	21.4	80	22.3			80	14.1					80	12.6					39.4
45.9	74	16.3	78	19.2	80	18.1	78	14.1					79	12.6					45.9
52.5	72	12.6	75	15.0	78	17.0	77	12.3	80	14.1			78	11.7	80	12.6			52.5
59.1	70	9.7	73	11.7	76	13.7	75	9.7	78	11.9	80	12.6	76	9.0	79	11.2			59.1
65.6	68	7.3	71	9.3	73	10.8	74	7.5	76	9.5	78	11.0	75	7.1	77	9.0	79	10.6	65.6
72.2	66	5.3	69	7.1	71	8.4	72	5.7	75	7.5	77	8.8	73	5.3	76	7.1	78	8.4	72.2
78.7	63	3.7	66	5.3	69	6.4			73	5.7	75	7.1			74	5.5	76	6.6	78.7
85.3			64	3.7	66	4.9			71	4.4	73	5.3			73	4.0	75	5.1	85.3
91.9					64	3.3					71	4.0					73	3.7	91.9
98.4																			98.4
105.0																			105.0
111.5																			111.5
118.1																			118.1
124.7																			124.7
131.2																			131.2
144.4																			144.4
Telescoping sequence %																			
Tel. 1	92						92						100						Tel. 1
Tel. 2	92						92						100						Tel. 2
Tel. 3	46						92						100						Tel. 3
Tel. 4	46						92						100						Tel. 4
Tel. 5	46						92						100						Tel. 5

View thousands of Crane Specifications on FreeCraneSpecs.com

ATF 130G-5 TADANO-Load rating chart

Counterweight 0lbs

Working radius [ft]	Lifting capacities in 1,000 lbs according per SAE J765 on fly jib 59.1 ft On outriggers, 360° working area **Outrigger base 24.61 ft** Boom length 42.0 ft Fly jib 59.1 ft offset						Boom length 42.0 ft to 84.5 ft Fly jib 59.1 ft offset						Boom length 42.0 ft to 112.9 ft Fly jib 59.1 ft offset						Working radius [ft]
	0°		20°		40°		0°		20°		40°		0°		20°		40°		
	∠°		∠°		∠°		∠°		∠°		∠°		∠°		∠°		∠°		
9.8	80	17.2																	9.8
11.5	79	17.2																	11.5
13.1	78	17.2																	13.1
14.8	77	17.2																	14.8
16.4	76	17.2					80	16.3											16.4
19.7	74	17.2					79	16.3											19.7
23.0	73	16.5					78	16.3					80	13.0					23.0
26.2	71	15.7					77	16.3					79	13.0					26.2
29.5	69	14.8	80	11.5			75	16.3					78	13.0					29.5
32.8	67	13.9	78	11.0			74	15.7					77	13.0					32.8
36.1	65	13.2	76	10.4			73	15.2					76	13.0					36.1
39.4	63	12.6	74	9.9			71	14.6	79	10.6			75	13.0					39.4
45.9	58	11.2	70	9.0	79	7.7	69	13.4	77	9.7			73	13.0	79	9.5			45.9
52.5	54	10.1	65	8.4	75	7.3	66	12.6	74	9.3	80	7.5	71	12.6	77	9.0			52.5
59.1	49	9.3	60	7.7	70	6.8	63	11.7	71	8.6	77	7.1	69	11.9	75	8.6	80	7.1	59.1
65.6	44	8.6	55	7.3	64	6.6	60	10.8	68	8.2	74	6.8	66	11.0	73	8.2	78	6.6	65.6
72.2	38	7.9	49	6.8	58	6.4	57	8.8	65	7.7	71	6.6	64	9.0	70	7.9	75	6.4	72.2
78.7	32	7.3	43	6.6	50	6.2	54	6.8	62	7.3	67	6.4	62	7.5	68	7.5	73	6.4	78.7
85.3	24	6.8	35	6.4			51	5.3	58	7.1	64	6.2	59	6.0	65	7.3	70	6.2	85.3
91.9	10	6.6					47	4.0	55	5.7	60	6.0	57	4.6	62	6.4	67	6.0	91.9
98.4							43	2.6	51	4.4	56	5.7	54	3.5	60	5.1	64	5.7	98.4
105.0									47	3.3	51	4.2	51	2.6	57	4.0	61	5.1	105.0
111.5									42	2.2	46	2.9			54	3.1	58	4.0	111.5
118.1															51	2.2	55	2.9	118.1
124.7																	51	2.0	124.7
131.2																			131.2
144.4																			144.4
Telescoping sequence %																			
Tel. 1	0						46						46						Tel. 1
Tel. 2	0						46						46						Tel. 2
Tel. 3	0						46						46						Tel. 3
Tel. 4	0						0						46						Tel. 4
Tel. 5	0						0						46						Tel. 5

Working radius [ft]	Lifting capacities in 1,000 lbs according per SAE J765 on fly jib 59.1 ft On outriggers, 360° working area **Outrigger base 24.61 ft** Boom length 42.0 ft to 141.2 ft Fly jib 59.1 ft offset						Boom length 42.0 ft to 183.7 ft Fly jib 59.1 ft offset						Boom length 42.0 ft to 196.8 ft Fly jib 59.1 ft offset						Working radius [ft]
	0°		20°		40°		0°		20°		40°		0°		20°		40°		
	∠°		∠°		∠°		∠°		∠°		∠°		∠°		∠°		∠°		
9.8																			9.8
11.5																			11.5
13.1																			13.1
14.8																			14.8
16.4																			16.4
19.7																			19.7
23.0																			23.0
26.2																			26.2
29.5																			29.5
32.8	80	12.1																	32.8
36.1	79	12.1																	36.1
39.4	78	12.1																	39.4
45.9	76	12.1					79	8.6					80	7.9					45.9
52.5	74	12.1	80	9.0			78	8.6					79	7.9					52.5
59.1	73	10.6	78	8.6			77	8.6					78	7.9					59.1
65.6	71	8.4	76	8.2	80	6.6	75	7.9	80	7.7			76	7.5					65.6
72.2	69	6.4	74	7.9	78	6.4	74	6.2	78	7.5			75	5.7					72.2
78.7	67	4.9	72	7.5	76	6.2	73	4.9	77	7.3	80	6.0							78.7
85.3	65	3.5	70	5.7	74	6.0			75	5.7	79	5.7							85.3
91.9			68	4.4	72	6.0			74	4.4	77	5.5							91.9
98.4			66	3.3	70	4.9					75	5.1							98.4
105.0					67	3.7					74	4.0							105.0
111.5																			111.5
118.1																			118.1
124.7																			124.7
131.2																			131.2
144.4																			144.4
Telescoping sequence %																			
Tel. 1	92						92						100						Tel. 1
Tel. 2	92						92						100						Tel. 2
Tel. 3	46						92						100						Tel. 3
Tel. 4	46						92						100						Tel. 4
Tel. 5	46						92						100						Tel. 5

View thousands of Crane Specifications on FreeCraneSpecs.com

ATF 130G-5 TADANO-Load rating chart

Counterweight 0lbs

Working radius [ft]	Lifting capacities in 1,000 lbs according per SAE J765 on fly jib 82.0 ft On outriggers, 360° working area **Outrigger base 24.61 ft** Boom length 42.0 ft						Boom length 42.0 ft to 84.5 ft						Boom length 42.0 ft to 112.9 ft						Working radius [ft]
	Fly jib 82.0 ft offset						Fly jib 82.0 ft offset						Fly jib 82.0 ft offset						
	0°		20°		40°		0°		20°		40°		0°		20°		40°		
	∠°		∠°		∠°		∠°		∠°		∠°		∠°		∠°		∠°		
9.8																			9.8
11.5																			11.5
13.1																			13.1
14.8	80	11.2																	14.8
16.4	79	11.2																	16.4
19.7	78	11.2																	19.7
23.0	76	11.2					80	10.8											23.0
26.2	75	11.2					79	10.8											26.2
29.5	73	11.2					78	10.8					80	8.8					29.5
32.8	72	11.2					77	10.8					79	8.8					32.8
36.1	70	11.2					76	10.8					78	8.8					36.1
39.4	69	11.2					75	10.8					77	8.8					39.4
45.9	66	10.8	78	9.9			72	10.8					75	8.8					45.9
52.5	62	10.4	75	8.8			70	10.6	79	9.5			74	8.8					52.5
59.1	59	9.7	71	7.9			68	10.4	77	9.0			72	8.8	80	8.4			59.1
65.6	55	8.4	67	7.3	79	6.2	65	9.9	74	8.6			70	8.8	78	8.2			65.6
72.2	51	7.5	64	6.6	74	5.7	63	9.7	72	7.9	80	6.2	68	8.8	76	7.9			72.2
78.7	47	6.6	59	6.2	70	5.5	60	7.9	69	7.5	77	6.0	66	7.7	74	7.5	80	6.0	78.7
85.3	43	6.0	55	5.7	65	5.1	58	6.4	67	7.1	74	5.5	64	6.4	71	7.3	78	5.7	85.3
91.9	38	5.3	50	5.3	60	4.9	55	5.1	64	6.6	71	5.3	62	5.1	69	7.1	75	5.5	91.9
98.4	33	4.9	45	5.1	54	4.6	52	4.0	61	6.0	68	5.1	60	4.0	67	6.2	73	5.3	98.4
105.0	26	4.4	38	4.6			49	2.9	58	4.9	65	5.1	57	3.1	65	5.1	70	5.1	105.0
111.5	18	4.0					46	2.0	55	3.7	61	4.9	55	2.2	62	4.0	68	5.1	111.5
118.1									51	2.6	57	4.0			60	3.1	65	4.4	118.1
124.7									48	2.0	53	2.9			57	2.2	62	3.5	124.7
131.2											49	2.0					59	2.6	131.2
144.4																			144.4
Telescoping sequence %																			
Tel. 1	0						46						46						Tel. 1
Tel. 2	0						46						46						Tel. 2
Tel. 3	0						46						46						Tel. 3
Tel. 4	0						0						46						Tel. 4
Tel. 5	0						0						46						Tel. 5

Working radius [ft]	Lifting capacities in 1,000 lbs according per SAE J765 on fly jib 82.0 ft On outriggers, 360° working area **Outrigger base 24.61 ft** Boom length 42.0 ft to 141.2 ft						Boom length 42.0 ft to 183.7 ft						Boom length 42.0 ft to 196.8 ft						Working radius [ft]
	Fly jib 82.0 ft offset						Fly jib 82.0 ft offset						Fly jib 82.0 ft offset						
	0°		20°		40°		0°		20°		40°		0°		20°		40°		
	∠°		∠°		∠°		∠°		∠°		∠°		∠°		∠°		∠°		
9.8																			9.8
11.5																			11.5
13.1																			13.1
14.8																			14.8
16.4																			16.4
19.7																			19.7
23.0																			23.0
26.2																			26.2
29.5																			29.5
32.8																			32.8
36.1	80	8.4																	36.1
39.4	79	8.4																	39.4
45.9	78	8.4					80	6.4											45.9
52.5	76	8.4					79	6.4											52.5
59.1	75	8.4					78	6.4											59.1
65.6	73	8.4	80	7.9			77	6.4											65.6
72.2	72	6.8	78	7.7			76	6.2											72.2
78.7	70	5.3	77	7.5			74	4.9											78.7
85.3	68	4.0	75	7.1	80	6.0													85.3
91.9			73	5.5	78	5.7													91.9
98.4			71	4.4	76	5.5													98.4
105.0			69	3.3	75	5.3													105.0
111.5					72	4.2													111.5
118.1					70	3.1													118.1
124.7																			124.7
131.2																			131.2
144.4																			144.4
Telescoping sequence %																			
Tel. 1	92						92						100						Tel. 1
Tel. 2	92						92						100						Tel. 2
Tel. 3	46						92						100						Tel. 3
Tel. 4	46						92						100						Tel. 4
Tel. 5	46						92						100						Tel. 5

View thousands of Crane Specifications on FreeCraneSpecs.com

ATF 130G-5 TADANO-Load rating chart

Counterweight 0lbs

Working radius [ft]	Lifting capacities in 1,000 lbs according per SAE J765 on fly jib 105.0 ft On outriggers, 360° working area **Outrigger base 24.61 ft** Boom length 42.0 ft Fly jib 105.0 ft offset						Boom length 42.0 ft to 84.5 ft Fly jib 105.0 ft offset						Boom length 42.0 ft to 112.9 ft Fly jib 105.0 ft offset						Working radius [ft]
	0°		20°		40°		0°		20°		40°		0°		20°		40°		
	∠°		∠°		∠°		∠°		∠°		∠°		∠°		∠°		∠°		
9.8																			9.8
11.5																			11.5
13.1																			13.1
14.8																			14.8
16.4																			16.4
19.7	80	7.7																	19.7
23.0	79	7.7																	23.0
26.2	77	7.7					80	7.3											26.2
29.5	76	7.7					80	7.3											29.5
32.8	75	7.7					79	7.3											32.8
36.1	74	7.7					78	7.3					80	6.2					36.1
39.4	73	7.7					77	7.3					79	6.2					39.4
45.9	70	7.7					75	7.3					77	6.2					45.9
52.5	67	7.7					73	7.3					75	6.2					52.5
59.1	65	7.7	78	6.8			71	7.3					74	6.2					59.1
65.6	62	7.1	75	6.2			69	7.3	79	6.8			72	6.2	82	6.2			65.6
72.2	59	6.2	72	5.7			67	7.3	77	6.4			70	6.2	80	6.2			72.2
78.7	56	5.5	69	5.1			65	7.3	75	6.0			69	6.2	78	6.0			78.7
85.3	52	4.9	66	4.9	78	4.2	63	6.8	73	5.5			67	6.2	76	5.5			85.3
91.9	49	4.4	63	4.4	75	4.0	60	6.0	70	5.1	79	4.2	65	5.5	74	5.5			91.9
98.4	46	4.0	59	4.2	71	3.5	58	4.9	68	4.9	77	4.0	64	4.4	72	5.3	80	4.0	98.4
105.0	42	3.5	55	3.7	66	3.5	56	3.7	66	4.6	74	3.7	62	3.5	70	4.9	78	3.7	105.0
111.5	38	3.1	51	3.5	62	3.3	53	2.9	63	4.4	72	3.5	60	2.9	68	4.6	76	3.7	111.5
118.1	33	2.9	46	3.3	56	3.1	50	2.2	60	4.0	69	3.3			66	4.2	73	3.5	118.1
124.7	28	2.6	41	3.1	50	3.1			58	3.1	66	3.3			64	3.3	71	3.3	124.7
131.2	21	2.4	33	3.1					55	2.4	63	3.1			62	2.6	69	3.3	131.2
144.4											55	2.2					64	2.6	144.4
Telescoping sequence %																			
Tel. 1	0						46						46						Tel. 1
Tel. 2	0						46						46						Tel. 2
Tel. 3	0						46						46						Tel. 3
Tel. 4	0						0						46						Tel. 4
Tel. 5	0						0						46						Tel. 5

Working radius [ft]	Lifting capacities in 1,000 lbs according per SAE J765 on fly jib 105.0 ft On outriggers, 360° working area **Outrigger base 24.61 ft** Boom length 42.0 ft to 141.2 ft Fly jib 105.0 ft offset						Boom length 42.0 ft to 183.7 ft Fly jib 105.0 ft offset						Boom length 42.0 ft to 196.8 ft Fly jib 105.0 ft offset						Working radius [ft]
	0°		20°		40°		0°		20°		40°		0°		20°		40°		
	∠°		∠°		∠°		∠°		∠°		∠°		∠°		∠°		∠°		
9.8																			9.8
11.5																			11.5
13.1																			13.1
14.8																			14.8
16.4																			16.4
19.7																			19.7
23.0																			23.0
26.2																			26.2
29.5																			29.5
32.8																			32.8
36.1																			36.1
39.4	80	6.0																	39.4
45.9	79	6.0																	45.9
52.5	78	6.0																	52.5
59.1	76	6.0																	59.1
65.6	75	6.0																	65.6
72.2	74	6.0																	72.2
78.7	72	5.7	80	5.7															78.7
85.3	71	4.4	79	5.5															85.3
91.9			77	5.3															91.9
98.4			75	5.1															98.4
105.0			74	4.4	80	4.0													105.0
111.5			72	3.3	78	3.7													111.5
118.1					77	3.5													118.1
124.7					75	3.5													124.7
131.2																			131.2
144.4																			144.4
Telescoping sequence %																			
Tel. 1	92						92						100						Tel. 1
Tel. 2	92						92						100						Tel. 2
Tel. 3	46						92						100						Tel. 3
Tel. 4	46						92						100						Tel. 4
Tel. 5	46						92						100						Tel. 5

View thousands of Crane Specifications on FreeCraneSpecs.com

WARNING AND OPERATING INSTRUCTIONS FOR LIFTING CAPACITIES ATF130G-5

GENERAL

1. Total rated loads shown on the TADANO LOAD RATING CHART apply only to the machine as originally manufactured and normally equipped by TADANO. Modifications to the machine or use of optional equipment other than that specified can result in a reduction of capacity.
2. Hydraulic cranes can be hazardous if improperly operated or maintained. Operation and maintenance of this machine must be in compliance with the information in the ***Operation and Maintenance Manual*** supplied with the machine. If this manual is missing, order a replacement through the distributor.
3. The operator and other personnel associated with this machine shall fully acquaint themselves with the latest applicable American National Standards Institute (ANSI) safety standards for cranes.

SET UP

1. Total rated loads shown on the TADANO LOAD RATING CHART are the maximum allowable crane capacities. They are based on the machine standing level on firm supporting surface under ideal job conditions. Depending on the nature of the supporting surface, it may be necessary to have structural supports under the outrigger floats to spread the load to a larger bearing surface.
2. For on outrigger operation, outriggers shall be extended to the dimension according to the TADANO LOAD RATING CHART and secured by pins with tires free of supporting surface, before operating crane.
3. Working on tires and travelling with load is not allowed.

OPERATION

1. Total rated loads with outriggers fully extended do not exceed 85% of the tipping loads. Total rated loads with outriggers partially extended are determined by this formula:
   Total rated load = (tipping load -0.1 tip reaction) / 1.25.
2. The crane's structural steelwork is in accordance with DIN 15018, part 3. Design and construction of the crane comply with DIN 15018, part 2 and with F.E.M. regulations.
3. Total rated loads include the weight of the main hook block, auziliary hook ball, sling and other auxiliary lifting devices and all their weight shall be subtracted from the listed capacities to obtain the net load to be lifted.

Hookball / Hookblock (ton)	11.0	27.6		69.5				88.2			137.8			
No. of parts of line	1	2	3	4	5	6	7	8	9	10	11	12	13	14
Max. lifting capacity (ton)	9.6	18.8	28.2	37.5	46.7	60.0	65.0	74.2	83.2	92.1	101.1	110.0	118.8	127.5
Weight (lbs)	661	875		1,323				1,764			2,646			

   (For more than 14 rope lines additional lifting equipment is necessary)
4. Total rated loads are based on freely suspended loads and make no allowance for such factors as the effect of wind, sudden stopping of loads, supporting surface conditions, operating speeds, side loads, etc. Side pull on boom or jib is extremely dangerous.
5. Total rated loads do not account for wind on lifted load or boom. Total rated loads and boom length shall be appropriately reduced, when wind velocity is above 18 mph (26 ft/sec.) for boom operation. and above 15 mph (22ft/sec.) for jib operation.
6. Total rated loads at load radius shall not be exceeded. Do not tip the crane to determine allowable loads.
7. Do not operate at boom lengths beyond radius or boom angles where no capacities are shown. Crane may overturn without any load on the hook.
8. Slewing of the superstructure is admissible only when the crane is supported on half or fully extended outriggers.
9. The lifting capacity ratings specified in the TADANO LOAD RATING CHART apply to the telescopic boom without fly jib fixed in transport position or working position.
   If the fly jib is secured to the telescopic boom in transport position or working position, the lifting capacities of the telescopic boom are reduced by the values specified below
   The weight of the fly jib is detected in terms of a load, and the load moment limiter will shut off earlier

Load rating reduction (x 1000lbs)										
Jib status	Boom length (ft)									
	42.0	56.2	70.3	98.7	112.9	127.0	141.2	155.4	169.6	196.8
12.5ft/33.5ft/59.1ft fly jib, mounted in transport position	1.15	0.71	0.51	0.33	0.29	0.24	0.15	0.11	0.07	0.02
12.5ft fly jib,mounted to the boom head	2.18	2.03	1.94	1.81	1.76	1.74	1.74	1.72	1.70	1.68
33.5ft fly jib,mounted to the boom head	4.06	3.66	3.42	3.06	2.95	2.87	2.82	2.78	2.76	2.71
59.1ft fly jib, mounted to the boom head	6.61	5.75	5.27	4.50	4.30	4.10	4.03	3.92	3.86	3.77
82.0ft fly jib,mounted to the boom head	10.47	8.88	7.94	6.50	6.11	5.78	5.62	5.42	5.29	5.11
105.0ft fly jib,mounted to the boom head	15.10	12.59	11.09	8.80	8.18	7.63	7.39	7.05	6.83	6.59

10. When making lifts at a load radius not shown, use the next longer radius to determine allowable capacity.
11. Load per part line should not exceed 19,180 lbf for the main winch and for the auxiliary winch.
12. Loaded boom angles are approximate. The boom angle before loading should be greater to account for deflection.
13. The 42.0 ft boom length capacities are based on the telescopic boom being fully retracted. If not fully retracted(less than 56.2 ft boom length), use the total rated loads for 56.2ft boom length according to the telescoping sequence.
14. Extension or retraction of the telescopic boom with loads may be attempted within the limits of the TADANO LOAD RATING CHART. The ability to telescope loads is limited by hydraulic pressure, boom angle, boom length, crane maintenance, etc.
15. When erecting or stowing the extendible fly jib, be sure to retain it by hand or by other means to prevent its free movement.
16. Use the Anti-Two Block (OVERWIND CUTOUT) disable switch when erecting or stowing the extendible fly jib and stowing the hook block. While the switch is pushed, the hoist will not stop, even when an overwind condition occurs.
17. The working radius specified in the TADANO LOAD RATING CHARTS for the extendible fly jib applies only if the telescopic boom is extended according to the TADANO LOAD RATING CHARTS. If one or more elements of the telescopic boom are retracted partially or completely, the specified boom angles will be decisive in determining total rated lifting capacities.
18. When lifting a load by using the extendible fly jib (auxiliary hoist) and telescopic boom (main hoist) simultaneously, do the following:
    A. Select the correct program for the load moment device in accordance with jib length, jib offset angle, counterweight and outrigger base.
    B. Before starting the operation, make sure that the weight of the load is within the total rated load for the fly jib.
19. Working with Single Top
    Operation with the single top is allowed with the main winch and the auxiliary winch (2nd winch). The maximum allowed capacity is limited by the selected S.L.I. code for main boom operation according to existing counterweight and outrigger base at one side and by the single line pull which is limited by hydraulic pressure at the other side.
    For operations with the single top mounted, use the TADANO LOAD RATING CHART for the telescopic boom in accordance with existing counterweight and outrigger base to find the total rated lifting capacity and also select the correct S.L.I. code for the telescopic boom in accordance with the existing counterweight and outrigger base. Find the total rated lifting capacity based on boom length and working radius. From that value, subtract 1,100 lbs and the weights of all lifting equipment used including hook block, sling and other auxiliary lifting devices. The result (<total rated lifting capacity> - <1,100 lbs> - <lifting equipment>) is the total rated lifting capacity for a single top lift.

Definitions

1. Load Radius:
   Horizontal distance from a projection of the axis of rotation to supporting surface before loading to the center of the vertical hoist line or tackle with load applied. The deflection of the boom due to its deadweight and the rated load are taken into account.
2. Loaded Boom Angle:
   The angle between the boom base section and the horizontal, after lifting the total rated load at the working radius
3. Working Area:
   Area measured in a circular arc about the centerline of rotation
4. Freely Suspended Load:
   Load hanging free with no direct external force applied except by the hoist line.
5. Side Load:
   Horizontal side force applied to the lifted load either on the ground or in the air.

Safe Load Indicator

The Safe Load Indicator is intended as an aid to the operator. Under no condition should it be relied upon to replace use of TADANO LOAD RATING CHARTS and Operating Instructions. Sole reliance upon the Safe Load Indicator Aids in place of good operating practice can cause an accident. The operator must exercise caution to assure safety.

View thousands of Crane Specifications on FreeCraneSpecs.com

ATF130G-5 Axle weight distribution chart

1) Normal traveling condition

	GVW	Axle 1	Axle 2	Axle 3	Axle 4	Axle 5
Base machine with 20.5R25 tires, 10x8 drive, no counterweight, 100% fuel, A/C both cabins	113,828	24,114	24,100	21,732	22,034	21,848
Add: A : 6,834lbs (1.5 metric ton) Counterweightat superstructure : Cwt. # 7	6,822	-2376	-2352	3914	3818	3818
B : 1,984lbs (1.8 metric ton) Counterweight (1,984lbs x 2pcs.)at superstructure : Cwt. # 8 & # 9	3,925	-1585	-1569	2399	2340	2340
C : 3,306lbs (3.1 metric ton) Counterweight (behind winch- fixed)at superstructure : Cwt. # 10	3,270	-1394	-1380	2048	1998	1998
Base machine with 20.5R25 tires, 10x8 drive, 100% fuel, A/C both cabs + Cwt. #7,#8,#9 & #10 (14,108lbs) at superstructure	127,845	18,759	18,799	30,093	30,190	30,004

Base machine with 20.5R25 tires, 10x8 drive, 100% fuel, A/C both cabs + Cwt. #7,#8,#9 & #10 (14,108lbs) at superstructure	126,535	18,546	18,586	29,797	29,896	29,710
Add: 1. 11.0 t (10metric ton) hook ball in Storage	662	73	72	175	171	171
2. 69.4t (63.0metric ton) 3 sheaves single hook block at front	1,322	1286	1273	-419	-409	-409
3. 88.2t (80.0metric ton) 5 sheaves dubble hook block at front	1,764	1715	1697	-558	-545	-545
4. 33.5 ft/ 59.1 ft fly jib (include brackets)	4,054	2,303	2,280	-179	-175	-175
5. Auxiliary winch with cable	3,241	-1,398	-1,384	2,041	1,991	1,991
6. Additional oil cooler	93	-11	-11	39	38	38
7. Towing attachment	176	-70	-70	107	105	105
8. Tool box at rear	154	-58	-57	91	89	89
9. 16.00R25 tyres in lieu of 20.5R25 tyres	-1103	-221	-221	-221	-221	-221
1. 5,952lbs (2.7 metric ton) Counterweight at carrier : Ctw. # 1	5,954	2,054	2,033	633	617	617
2. 7,495lbs (3.4 metric ton) Counterweight at carrier : Ctw. # 2	7,505	2,589	2,563	797	778	778
3. 19,621lbs (8.9 metric ton) Counterweight at carrier : Ctw. # 3	19,549	6,744	6,676	2,077	2,026	2,026

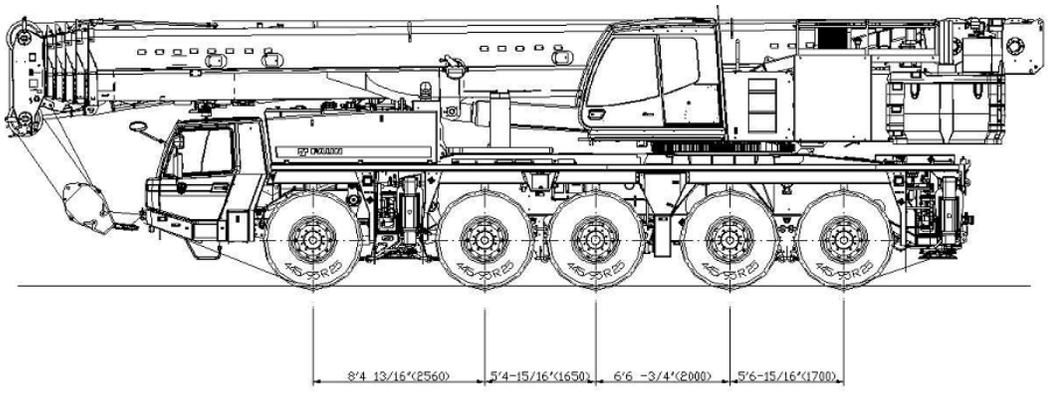

2) Traveling with boom dolly

	GVW	Axle 1	Axle 2	Axle 3	Axle 4	Axle 5	Dolly
Base machine with 20.5R25 tires, 10x8 drive, no counterweight, 100% fuel, A/C both cabins	119,337	18,790	18,829	18,602	18,981	18,795	
Add: A : 6,834lbs (1.5 metric ton) Counterweightat superstructure : Cwt. # 7	3,269	1,383	1,369	175	171	171	
B : 1,984lbs (1.8 metric ton) Counterweight (1,984lbs x 2pcs.)at superstructure : Cwt. # 8 & # 9	3,925	1,572	1,557	270	263	263	25,340
C : 3,306lbs (3.1 metric ton) Counterweight (behind winch- fixed)at superstructure : Cwt. # 10	6,822	2,353	2,330	725	707	707	
Base machine with 20.5R25 tires, 10x8 drive, 100% fuel, A/C both cabs + Cwt. #7,#8,#9 & #10 (14,108lbs) at superstructure	133,353	24,098	24,085	19,772	20,122	19,936	

Base machine with 20.5R25 tires, 10x8 drive, 100% fuel, A/C both cabs + Cwt. #7,#8,#9 & #10 (14,108lbs) at superstructure	133,353	24,098	24,085	19,772	20,122	19,936	25,340
Add: 1. 11.0 t (10metric ton) hook ball in Storage	662	73	72	175	171	171	0
2. 69.4t (63.0metric ton) 3 sheaves single hook block on dolly	1,322	0	0	0	0	0	1,322
3. 88.2t (80.0metric ton) 5 sheaves dubble hook block on dolly	1,746	0	0	0	0	0	1,764
4. 33.5 ft/ 59.1 ft fly jib (include brackets)	988	246	243	169	165	165	3,067
5. Auxiliary winch with cable	3,241	1,387	1,373	163	159	159	0
6. Additional oil cooler	93	11	11	24	23	23	0
7. Towing attachment	176	-70	-70	107	105	105	0
8. Tool box at rear	154	-58	-57	91	89	89	0
9. 16.00R25 tyres in lieu of 20.5R25 tyres	-1103	-221	-221	-221	-221	-221	0
1. 5,952lbs (2.7 metric ton) Counterweight at carrier : Ctw. # 1	5,954	2,054	2,033	633	617	617	0
2. 7,495lbs (3.4 metric ton) Counterweight at carrier : Ctw. # 2	7,505	2,589	2,563	797	778	778	0
3. 19,621lbs (8.9 metric ton) Counterweight at carrier : Ctw. # 3	19,549	6,744	6,676	2,077	2,026	2,026	0

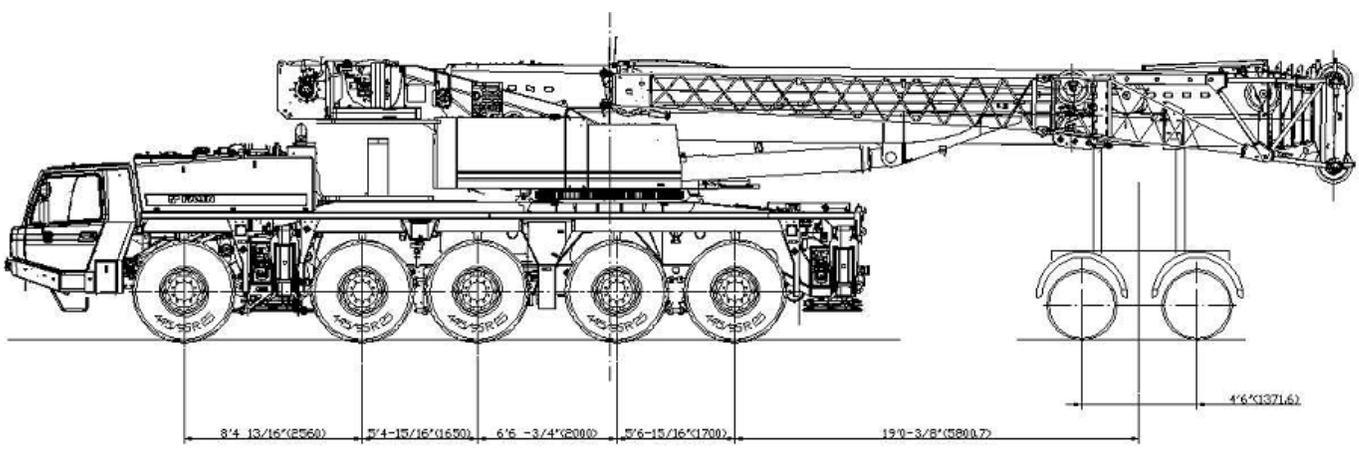

View thousands of Crane Specifications on FreeCraneSpecs.com

Mounting the 92,593 lbs (42 t) counterweight

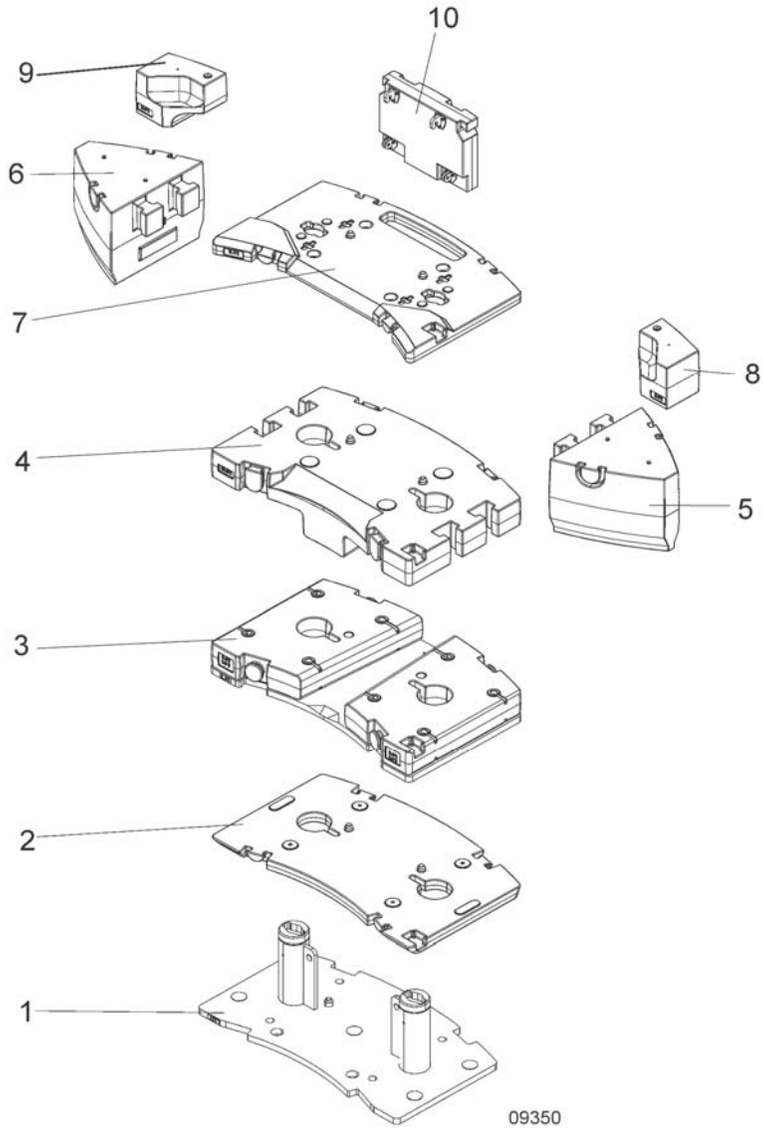

	1) 5,952 lb	2) 7,495 lb	3) 19,621lb	4) 22,046lb	5) 11,684lb	6) 11,684lb	7) 6,834lb	8) 1,984lb	9) 1,984lb	10) 3,306lb
0 lb										
7,275 lb								x	x	x
13,228 lb	x							x	x	x
20,062 lb	x						x	x	x	x
27,558 lb	x	x					x	x	x	x
47,178 lb	x	x	x				x	x	x	x
69,224 lb	x	x	x	x			x	x	x	x
92,593 lb	x	x	x	x	x	x	x	x	x	x

TADANO AMERICA CORPORATION
4242 WEST GREENS ROAD
HOUSTON, TEXAS 77066-4854 U.S.A.
PHONE: (281) 869-0030 EXT.315
FAX: (281) 869-0040
Web site: www.tadanoamerica.com/
E-mail: sales@tadano-cranes.com
Form No. TAC-ATF130G-5- (110118-ORmax + 3ctw L.C.)