View thousands of Crane Specifications on FreeCraneSpecs.com

National Series 600C

A heavy-duty telescoping crane from National, America's truck-mounted hydraulic crane leader

- Maximum Capacity: 34,000 Pounds (15.4 Metric Tons)
- Maximum Vertical Reach: 134 Feet (40.9 Meters)

View thousands of Crane Specifications on FreeCraneSpecs.com

Why buy the ALL NEW National Series 600C telescoping crane?

Here are some excellent reasons . . .

- The new Series 600C is the premier crane of its class in the commercial truck-mounted industry.
- The Series 600C has extra-heavy-duty lifting power -- a rated capacity of 34,000 pounds (15.4MT).
- The 681C has extra-long vertical reach -- to 91 feet (27.7m) under hydraulic power.
- With the 43-foot (13.1m) jib, the 681C reaches up to a vertical height of 134 feet (41.8m).
- The National-pioneered hydraulic-powered four-section boom on the 681C allows more reach with a fast and simple set-up procedure.
- A split (two-piece) removeable front console cover allows fast and easy access to valves and wiring.
- The improved high-performance winch with enhanced meterability allows precise load placement.
- Upgraded state-of-the-art automotive-type wiring with shrink wrap terminal connections helps prevent corrosion and improves the reliability of wiring throughout the crane.
- Two lower sheaves in the sheave case allow four-part reeving (with optional block) without attaching an additional sheave at the end of the boom.
- No counterweight is required with RSOD outriggers.

And here are even more . . .

Field-proven durability

- National has manufactured cranes since 1963. Over 90% of all Nationals ever produced are still in operation.

Attention to quality

National never skimps on quality. The materials and components used in the manufacture of National Cranes often cost more -- sometimes significantly more -- than those found in competitive products. With a National, you get more for each dollar that you invest in a crane.

Industry-leading test program

- Each prototype model must pass the stringent structural test requirements of SAE J1063 and the stability test requirements of SAEJ765.
- National's test program subjects all prototype cranes to state-of-the-art strain gauge testing, a procedure that measures metal deformation as small as one-millionth of an inch. These and the test procedures noted below verify the structural integrity of the cranes that National manufactures.
- Prototype cranes must undergo National's life-cycle tests, the toughest in the industry. They receive more punishment than most cranes encounter in a lifetime of rigorous, on-the-job use. Every structural part of the crane is cycle-tested. Some components are operated through 60,000 cycles at full capacity load. The process requires thousands of working hours and takes months to complete.
- Boom corner seam welds on all Nationals are ultrasonically tested to verify proper boom weld penetration.

Rigid quality controls

- Each Series 600C undergoes numerous quality inspections at all levels of manufacture and assembly. No crane is shipped without a rigid final inspection.
- Component manufacturers are critically reviewed by National's senior management before they qualify as suppliers of parts.
- Inspections of incoming materials and components ensure that purchased items meets National's standards.
- Material compositions are maintained and steel composition is regularly verified.
- All structural welders at National must pass AWS welder certifications.

More Value for your investment

- Nationals consistently have the highest resale value in the industry. You will realize a greater return on your investment when you trade or sell your used National.

View thousands of Crane Specifications on FreeCraneSpecs.com

Uncompromising Standards Unequaled Performance

Responsive service and parts support

- Each Series 600C is backed by strong after sale and service support. National's professional dealer network is worldwide. That means that service and repair resources are ever near, wherever you may be operating your National.
- The typical National dealer has been associated with National for more than eleven years. He knows the product.
- Authorized National dealers maintain a parts stocking program for your crane. That means when your Series 600C needs parts or service, it will be back on the job without undue frustration or delay.
- When a dealer cannot immediately supply a part for your Series 600C, the factory can. National is committed to providing 24-hour parts shipping in 92% of all breakdown rush orders.

The National Service Center

- National maintains a fully equipped Service Center at the plant to handle factory crane mounting and special crane modifications or repairs. Most dealers can handle all but the most unusual or serious service/repair requirements.

Efficient boom design

- National's computer-aided design (CAD) system utilizes sophisticated, state-of-the-art software programs to analyze and accurately predict the structural behavior of a machine or crane component prior to the actual manufacture of the unit. CAD mathmatically calculates boom stress factors, allowing National engineers to determine boom competence during the design process. All engineered parts are detailed on the computer. The program assures accurate fits in every phase of the manufacturing process. CAD enables National engineers to maximize the weight efficiency of Series 600C booms, thus enhancing crane capacities.
- The boom sections are fabricated from four high-strength steel members welded with perpendicular corners.

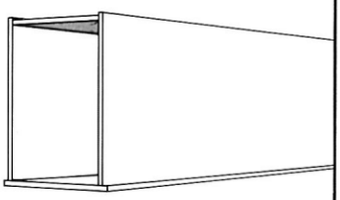

This "box-section" design (shown above) utilizes thicker top and bottom plates to en hance boom strength and thinner side plates to increase the crane capacity through lower boom weight.

- Only high-strength, low-alloy steel is used in boom fabrication.
- Welds are made with automatic, low-hydrogen techniques to ensure strong fatigue-resistant seams.

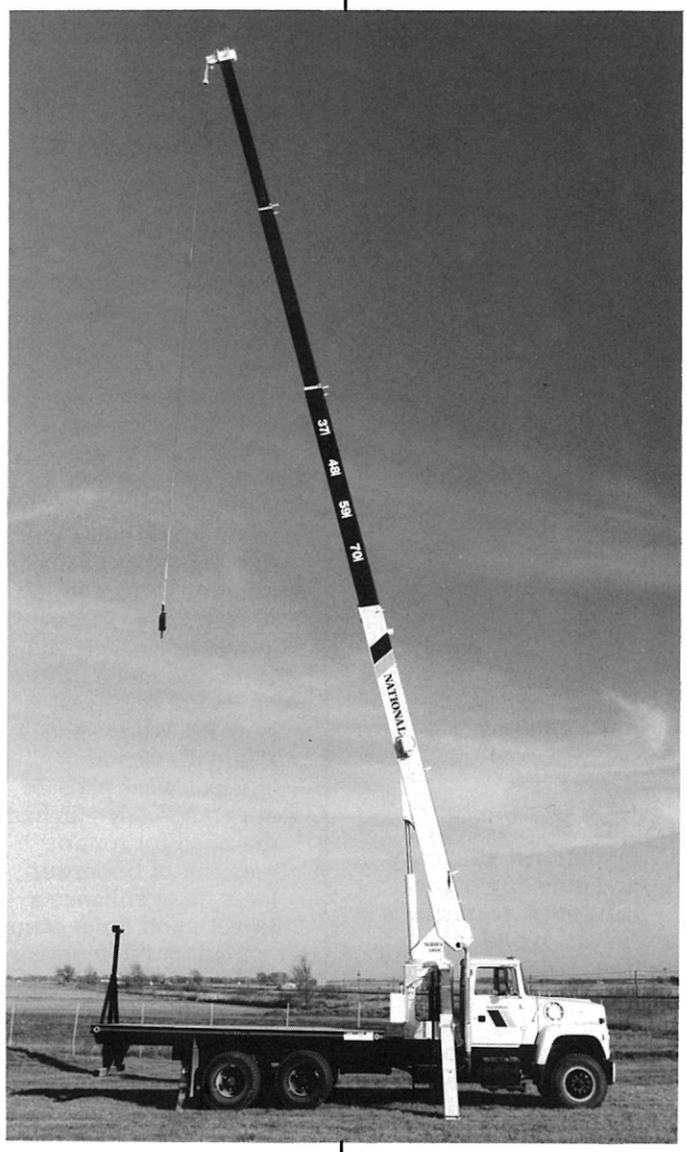

Stronger, more efficient sheaves

- The sheaves on the Series 600C consist of iron, not plastic (as is used on most competitive cranes). Iron sheaves provide greater strength and longer wear, resist flange chipping, and help prevent core damage to the wire rope.
- Two lower sheaves in the sheave case allow for four-part reeving (with optional block) without attaching additional equipment at the end of the boom.

Four Section proportional boom extension system

- The Series 600C is available in two models, both equipped with proportional boom extension systems. The three-section 671 Model is standard. The four-

View thousands of Crane Specifications on FreeCraneSpecs.com

National Series 600C

section proportional boom (Model 681C), pioneered by National, affords extra-long hydraulic reach. Both models set up fast and provide heavy-duty lifting power.

- Dual high-load-carrying cables cycle the fourth stage boom on the Model 681C crane. All other sections are supported by the hydraulic cylinder. Redundant cable sets are used for durability and reliability. The internal bearings and cable require no lubrication.
- Proportional (cable crowd) boom design (each boom extends and retracts proportionally during the telescoping operation) provides more efficient boom weight distribution, maximizing boom operational efficiency and allowing higher capacities, particularly in normal working radii.
- The design permits minimum overlap to get the most reach with minimum retracted length. It reduces boom overhang (when the boom is stowed) and allows increased truck maneuverability.
- The use of cable (rather than chain) means more capacity, longer service life, and less maintenance.
- There are no fittings, tubes, or hoses inside the booms, and since the system utilizes only one extend cylinder, hydraulic maintenance is minimized.

"Easy Glide" boom wear pads

- Series 600C booms are equipped with National's unique *"Easy Glide"* wear pads, a technology pioneered by National's engineering group.
- These pads reduce the conditions that cause noisy boom chatter and vibration.
- They feature an innovative self-lubricating capability that deposits and maintains a long-lasting film on boom sections and wear pad surfaces. This results in a smooth, reduced friction boom in/out movement during the extend/retract modes of operation -- even at slow operating speeds.
- While these uniquely efficient wear pads do not completely eliminate the need for routine greasing of boom surfaces, they enhance a smooth and quiet crane operation, reduce wear and tear on the unit, reduce maintenance, and are easy to replace.
- The wear resistance of the material in *"Easy Glide"* wear pads is unexcelled.

Direct mount holding valves

- On the Series 600C, all load-carrying cylinders are equipped with a direct mount holding valve for protection in the event of hose failure. The quiet, smooth, and stable new boom cylinder holding valve ensures a precise load placement capability with the boom.

National-manufactured cylinders

- Because National controls the manufacture of its own lift, outrigger, and stabilizer cylinders and the packing used as the seals, standardization is ensured and seal replacements fit properly.

High performance planetary winch

- The standard high-performance gear drive winch increases efficiency, requires less horsepower, and generates less heat.
- The Series 600C winch is powered by a premium, high-efficiency orbit (geroller) motor instead of the gear motor typically used on competitive cranes. The orbit motor used with National's high performance winch, allows for extra-smooth control, up or down, even under maximum load.
- Anti-friction roller bearings have replaced bronze bushings, and spring-loaded lip seals have replaced O-rings to reduce leaks and maximize winch efficiency.
- A *"Burst-of-Speed"* feature for faster, more efficient pay-out and pick-up of unloaded cable is optional on the Series 600C. The *"Burst-of-Speed"* winch circuitry increases line speed up to 60% over normal.
- The high-capacity winch used on the Series 600C features high line pull and fast standard speed (see the winch data chart on page 9).
- Standard brake and counterbalance valves provide fine control.
- The winch cover permits visibility of the drum and cable.
- Die-drawn rotation-resistant wire rope (cable) is standard on the 600C. Even under full load, die drawn wire rope minimizes spinning and twisting. Lifting operations are more precise and no time is wasted untangling the line. Die-drawn cable has a longer usable life span.

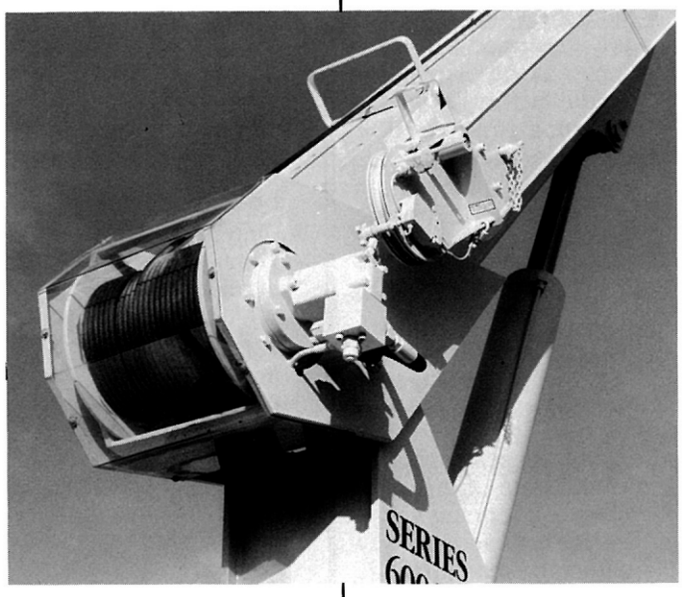

View thousands of Crane Specifications on FreeCraneSpecs.com

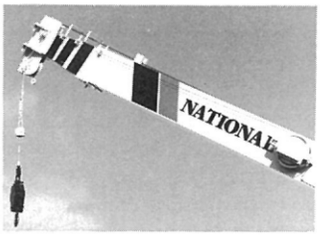

Anti-two-block system

- The Series 600C is equipped with a standard anti-two-block system. Two blocking occurs when the winch cable and attachments contact the underside of the jib sheave case, whether by winching up or extending the boom without paying out the winch cable. When this happens, the cable can be damaged by crimping or overextensioning. The anti-two-block attachment helps prevent cable damage by sensing the position of the winch cable end attachments with respect to the sheave case and shutting down the functions that can cause two-blocking.

Positive planetary turret rotation

- The planetary rotation gearbox with a hydraulic release brake and a slip-through feature allows the gearbox to backdrive when excessive side load is applied to the boom, reducing shock loads on the upper and lower crane structure and gearbox. This feature helps protect the rotation system against damage from accidental side loading.
- The turret drive is designed with extra heavy bearings below the drive pinion. The turntable bearing full-circle bolt pattern extends the bearing life due to uniform loads on the bearing.
- The gearbox and rotation bearing mounting surfaces are precision machined after welding to ensure consistent tooth alignment for smooth rotation and low wear, even under maximum loads.
- The entire turret glides smoothly on a low-inertia ball bearing race.
- Rotation is 375° noncontinuous. The rotation stop design eliminates the sudden stop on noncontinuous rotation machines by gradually slowing the rotation of the boom. Continuous rotation is available.

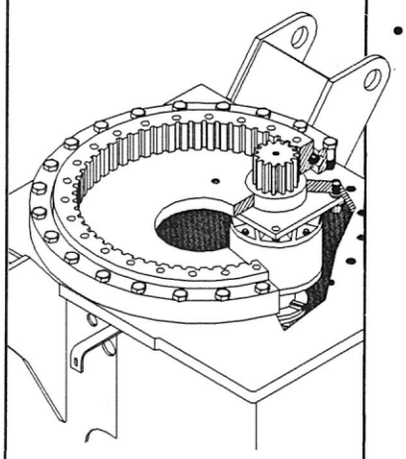

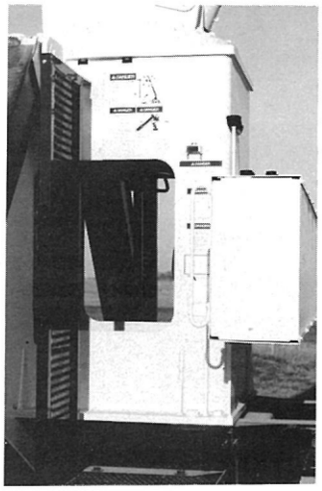

Solid, reliable stability

- Wide 19-foot 4-inch (5.9m) span A-frame out-and-down outriggers provide stable, efficient leveling, even on uneven ground. Large 18-by 18-inch (4.6dm by 4.6dm) outrigger pads are standard.
- The outriggers retract smoothly without binding under load, first moving up, then in (see diagram below).
- The outrigger and stabilizer hydraulic power is sufficient to level a fully loaded truck.
- With less truck weight you can carry larger payloads more economically.

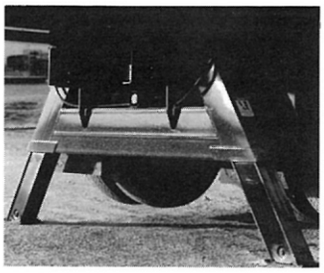

National's A-Frame "Out-and-Down" Stable Outriggers

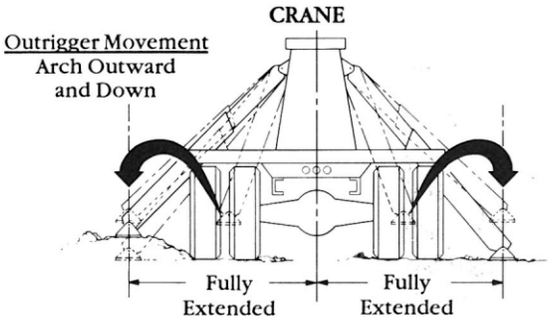

- **Outriggers equally spaced from crane center line.**
- **Consistent outrigger span**
- **Crane will be equally stable on both sides.**
- **No skidding the foot into position.**

View thousands of Crane Specifications on FreeCraneSpecs.com

National Series 600C (Continued)

- The 600C is equipped with ASH rear hydraulic stabilizers with a 10-foot (3.07m) span.
- Series 600C stabilizers are designed to lift and level -- or lower -- a loaded truck without sticking or binding. Hoses are routed along the beam to prevent hose damage during the operation of the crane.
- Stabilizer foot pad size is 6.5 by 11 inches. Leg travel is 20 inches, permitting good penetration with maximum ground clearance.
- A precision-mounted level indicator aids the operator in leveling the unit during the set-up procedure.

Smooth, "operator friendly" crane controls

- Dual controls are standard on the Series 600C. Identical crane functions are located on each side of the crane. The controls are in an SAE recommended orientation of functions. That means that you always work the same control with the same hand.
- Dual stations provide more efficient operation of the crane and allow greater load visibility.
- Control rods supported by nylon bearings permit smooth operation of the crane and reduce lubrication requirements.
- National's control valves are custom manufactured to maximize the efficiency of each crane function. They afford the ultimate in fine metering and low spool force. The operator can winch a capacity load up or down in small increments of distance and can control all crane functions precisely and smoothly.
- The main control valve and the lift cylinder holding valve are designed to complement one another, minimizing boom bounce and hydraulic noise.
- Clean engineered and electrical line routing prevent damage during crane operation and service. All electrical ends are crimp sealed. There are no spade connectors on the 600C.
- Labeled knobs make it easy for the operator to determine the function of each control.
- The pressure gauge on the console permits the operator to monitor the hydraulic system pressure to ensure maximum performance.
- The 600C provides a precise leveling indicator at each control station. The level bubble brackets are machined to be parallel with the turntable bearing to properly level the unit prior to operation.
- A foot throttle, horn, and stop switch are located at each control station.
- The operator's stations are positioned to allow easy reading of the angle indicator showing the boom angle during operation.
- The platforms are located to give the operator excellent visibility of the load as well as convenient access to the bed. They are designed with open-mesh expanded metal to minimize dirt and mud buildup.
- Extra high back rests at operator control stations aid in operator control and comfort.

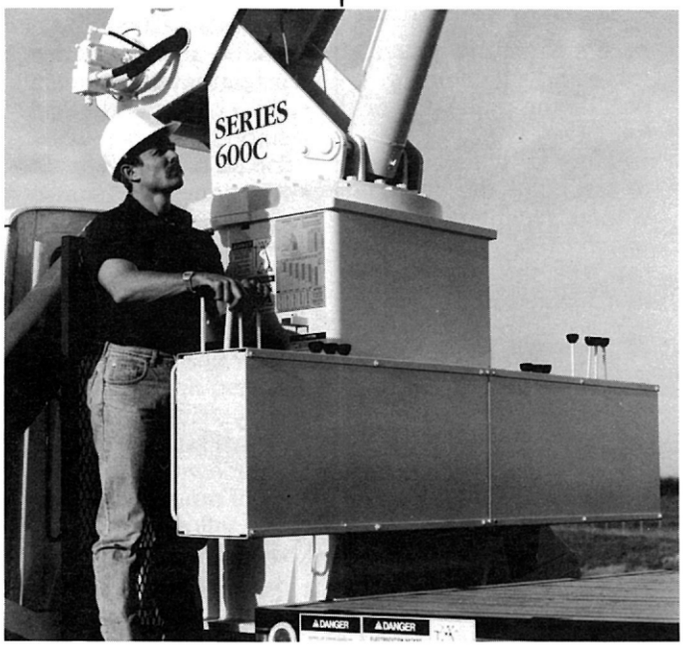

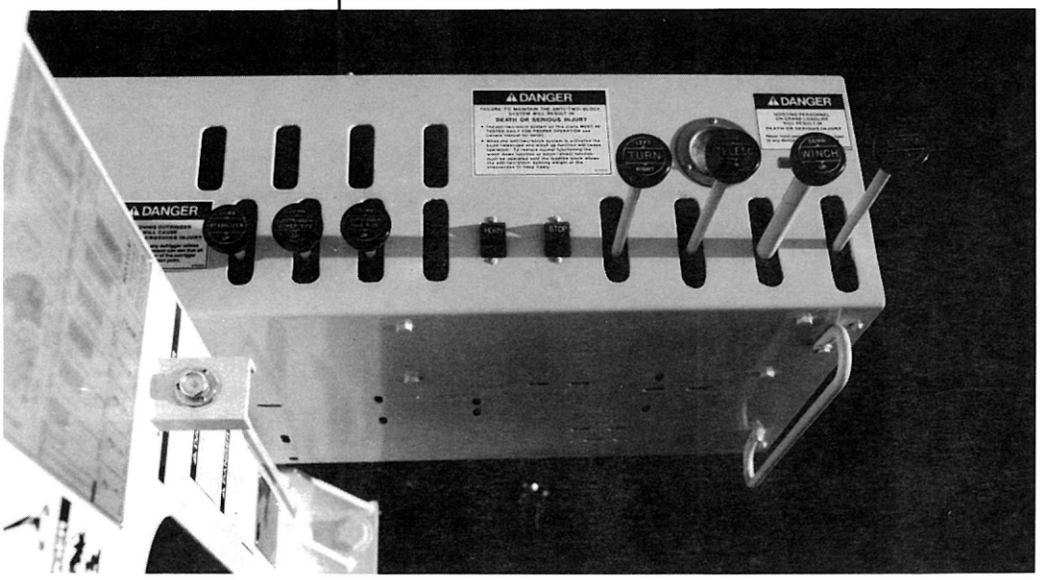

View thousands of Crane Specifications on FreeCraneSpecs.com

Heavy-duty hydraulic system

- A standard high-pressure, high-speed balanced vane replaceable tandem pump provides for a smooth, fast, simultaneous operation. The winch is isolated from other crane functions to provide an independent operation capability. The vane pump is more efficient and less costly to repair than the gear pumps used by some competitive manufacturers.
- Control valve spools are hard, chrome-plated for long life and resistance to corrosion. All spools are selected and hone-fitted for minimum internal leakage and for maximum load-holding ability.

Unitized Mounting

- National's unitized mount includes a one-piece, 8-inch deep subbase that extends along the frame and supports the crane and bed. It reduces counterweighting and increases stiffness and stability.
- Reinforcing is not required on trucks with 15.9 inch³* section modulus frames of 110,000 PSI minimum yield steel. The crane and subbase ship separately, then bolt together to form one solid integrated unit.

**20.0 inch³ for 360° stability*

Lower truck requirements

- The Series 600C is engineered to lower your truck requirements. The wide outrigger span, ASH rear stabilizers, and unitized mount take the stress (so the truck doesn't have to).
- That means that the 600C can mount on trucks with lower axle ratings and still meet DOT and industry stability standards with ease. It all adds up to lower maintenance, lower costs, and longer truck life for you.
- The Series 600C with subbase mounts on most standard, heavy-duty commercial trucks without requiring counterweight.

Easy service, low downtime

- The split console cover allows easy one man access to control valves.
- Boom pivot and lift cylinder bearings provide longer life and lower maintenance.
- Rear boom access provides easy access to wear pads and holding valve for easy maintenance.

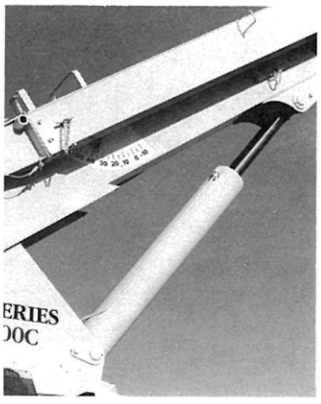

- The rotation drive and the brake are located inside the frame. A large access hole allows easy access for service.
- O-ring face seal fittings are used on all high pressure circuits to minimize fluid leakage.
- Main pins are chromed to inhibit rust and allow easy removal.
- Greaseless bearings are used throughout to reduce maintenance.
- Extra-capacity (75-gallon) oil reservoir with sight gauge, breather, suction strainer, clean-out, and magnetic plug reduces heat buildup and keeps the hydraulic oil clean, ensuring ease of maintenance and long machine life. The aluminized reservoir prevents the gathering of rust in the system.

The National Warranty

- The National Warranty covers your crane against defects in materials and workmanship for six months from the date of shipment, subject to the conditions of the warranty.

Versatile accessories

- A selection of boom/jib combinations (see following page) allows you to tailor your Series 600C to your job needs.
- A complete accessory line adds to the versatility of the Series 600C. See page 18 for details.

National Boom Rests

Cranes are tough when they are in use, but they can be severely damaged during travel from job to job. The only way a crane can be protected from this type of wear and damage is a strong, solid boom rest.

A boom rest:

- Adds years to the life of your crane
- Reduces stress on the crane frame
- Protects rotation gear from transit damage
- Removes stress from truck fame
- Spreads crane load more evenly
- Reduces maintenance and downtime

In addition, a boom rest is required to provide a positive way to immobilize your crane for transit.

National Crane supplies three heavy-duty boom rests for strong, sure protection of your crane. There is a quality boom rest to fit your mounting configuration. All National cranes must be fitted with a boom rest. All factory mounted cranes will be supplied with a boom rest.

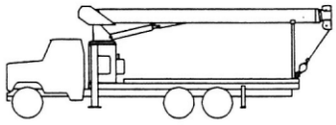

Fixed or removeable horizontal rear mounts for greater load space

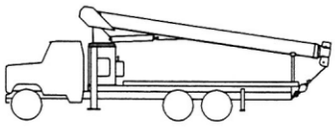

Low profile rear bed mount for lower center of gravity

View thousands of Crane Specifications on FreeCraneSpecs.com

National Series 600C Booms and Jibs

Boom and Jib Combinations

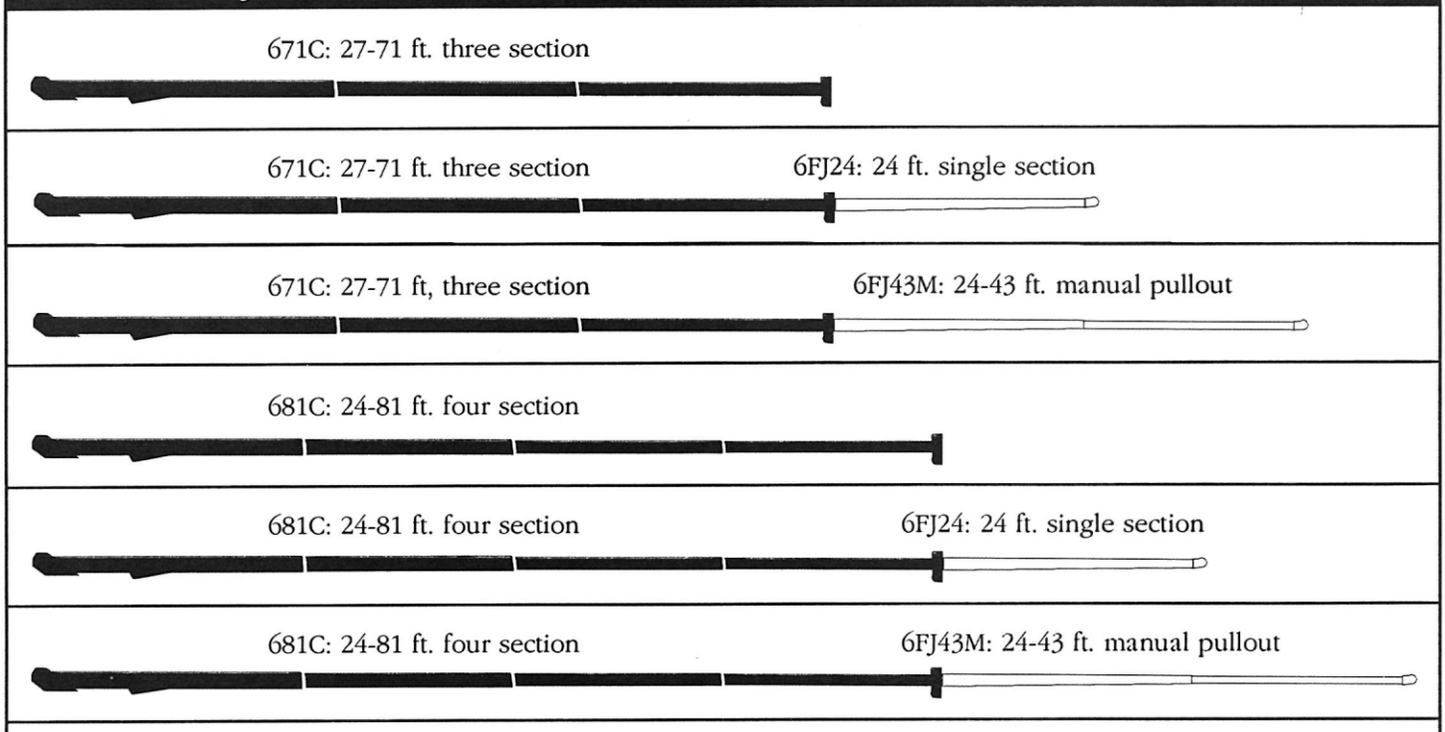

Reaches to 134 feet (40.8m)!

The Series 600C is available in two basic models:

Model 671C
Model 671C comes with a 27-71 foot (8.2-21.6m) three section boom. This model reaches to a height of 124 feet (37.8m) when equipped with the 43-foot (13.1m) jib. It reaches to a height of 81 feet (24.7m) hydraulically.

Model 681C
Model 681 comes with a 24-81 foot (7.3-24.7m) four section boom. This model reaches to a height of 134 feet (40.8m) when equipped with the 43-foot (13.1m) jib. It reaches to a height of 91 feet (27.7m) hydraulically.

Both models are available with the optional jibs shown in the chart above.

Note: An angling jib (6FJ15A) is available for Models 671C and 681C.

Other boom lengths are available on special request.

This sequence of photos shows how a National jib folds out into a working position.

View thousands of Crane Specifications on FreeCraneSpecs.com

National Series 600C Winch Data

National Series 600C Winch Data

Caution

- Do not deadhead lineblock against boom tip when extending boom.
- Keep at least three wraps of loadline on drum at all times.
- Use only 9/16" diameter rotation resistant cable with 38,500 pounds breaking strength on this machine.
- Maximum capacity with optional "Burst-of-Speed" is 3,000 pounds.

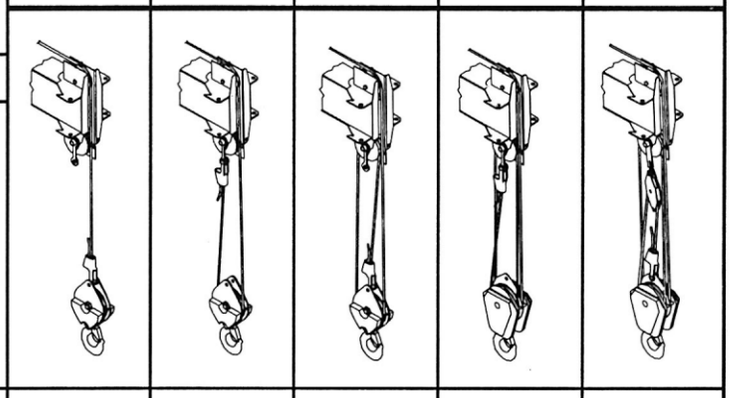

Winch	Cable Supplied	Average Breaking Strength	1 Part Line Lift and Speed	2 Part Line Lift and Speed	3 Part Line Lift and Speed	4 Part Line Lift and Speed	5 Part Line Lift and Speed
Standard Planetary Winch	9/16" diameter rotation resistant 19x7 IWRC	38,500 lbs.	7,700 lbs. 164 fpm	15,400 lbs. 82 fpm	23,100 lbs. 55 fpm	30,800 lbs. 41 fpm	34,000 lbs. 33 fpm
	Optional 9/16" diameter 6x25 IWRC	29,750 lbs.	7,700 lbs. 164 fpm	15,400 lbs. 82 fpm	23,100 lbs. 55 fpm	30,800 lbs. 41 fpm	34,000 lbs. 33 fpm
With "Burst-of-Speed" Feature	Same as corresponding cable data shown above		3,000 lbs. 265 fpm	6,000 lbs. 133 fpm	9,000 lbs. 88 fpm	12,000 lbs. 66 fpm	15,000 lbs. 53 fpm

All winch pulls and speeds are shown on the fourth layer. Winch pulls would increase on the first, second, and third layers. Winch line pulls would decrease on the first, second, and third layers. Winch line pulls may be limited by the winch capacity or the cable safety factor. These are shown below:

Winch	Bare Drum Pull	Allowable Cable Pull
With standard rotation resistant rope	10,000 pounds	7,700 pounds
With optional 6x25 IWRC rope	10,000 pounds	8,400 pounds

Do not operate crane booms, jib extensions, any accessories, or loads within 10 feet (3m) of live power lines or other conductors of electricity.

1. Load ratings shown on the following load rating charts are maximum allowable loads with the outriggers properly extended on a firm, level surface and the crane leveled and mounted on a factory-recommended truck.
2. Always level the crane with the level indicator located on the crane frame.
3. The operator must reduce loads to allow for factors such as wind, ground conditions, operating speeds and the effect of freely suspended loads.
4. Overloading this crane may cause structural collapse or instability.
5. Weights of any accessories attached to the boom or loadline must be deducted from the load chart capacities.
6. Do not exceed jib capacities at any reduced boom lengths.

View thousands of Crane Specifications on FreeCraneSpecs.com

National Series 600C
Load Rating Charts

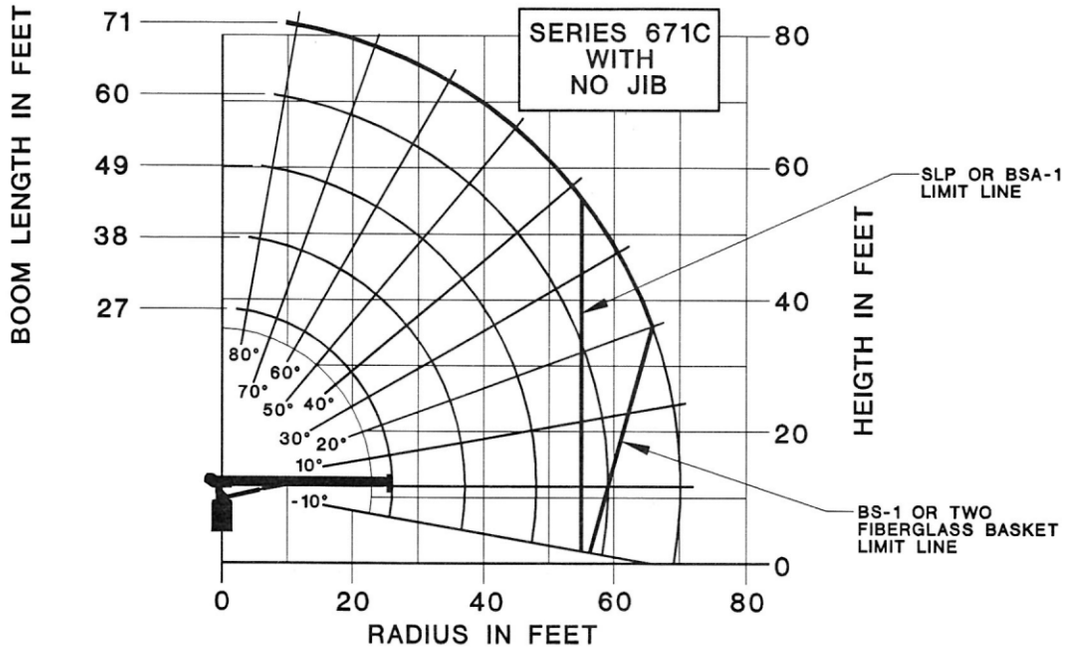

LOAD RADIUS (FEET)	LOADED BOOM ANGLE	27FT BOOM (LBS)	LOADED BOOM ANGLE	38FT BOOM (LBS)	LOADED BOOM ANGLE	49FT BOOM (LBS)	LOADED BOOM ANGLE	60FT BOOM (LBS)	LOADED BOOM ANGLE	71FT BOOM (LBS)	LOADLINE EQUIPMENT DEDUCT
					LOAD RATINGS						
4.5	80	34,000									DOWNHAUL WEIGHT = 150
8	72	21,500	78	19,500							ONE SHEAVE BLOCK = 200
10	67	17,900	74.5	16,100	78.5	14,900					TWO SHEAVE BLOCK = 355
12	62.5	15,400	71.5	13,900	76	12,800	79	11,800			
14	57	13,700	68	12,200	73.5	11,200	77	10,400	79.5	10,000	
16	52	12,300	64.5	10,900	71	9,900	75	9,200	77.5	8,800	
20	39.5	10,000	57	9,000	66	8,200	71.5	7,600	74.5	7,200	
25	17	7,600	49	7,500	60	6,800	66.5	6,200	70.5	5,800	
30			37.5	6,300	53	5,700	61	5,200	66	4,900	
35			21	5,000	44.5	4,900	55	4,500	61.5	4,200	
40					35	4,200	49	3,900	56.5	3,600	
45					22	3,500	42	3,300	51.5	3,150	
50							34	2,900	46	2,750	
55							23	2,500	40	2,400	
60									33	2,100	
65									23.5	1,750	
70									4	1,100	
	0	6,000	0	3,600	0	2,400	0	1,550	0	950	

View thousands of Crane Specifications on FreeCraneSpecs.com

The capacities shown will be reduced when accessories are attached to the boom or loadline.

Note: Rated loads do not exceed 85% of the tipping load. Structural strength ratings in the chart below are shaded.

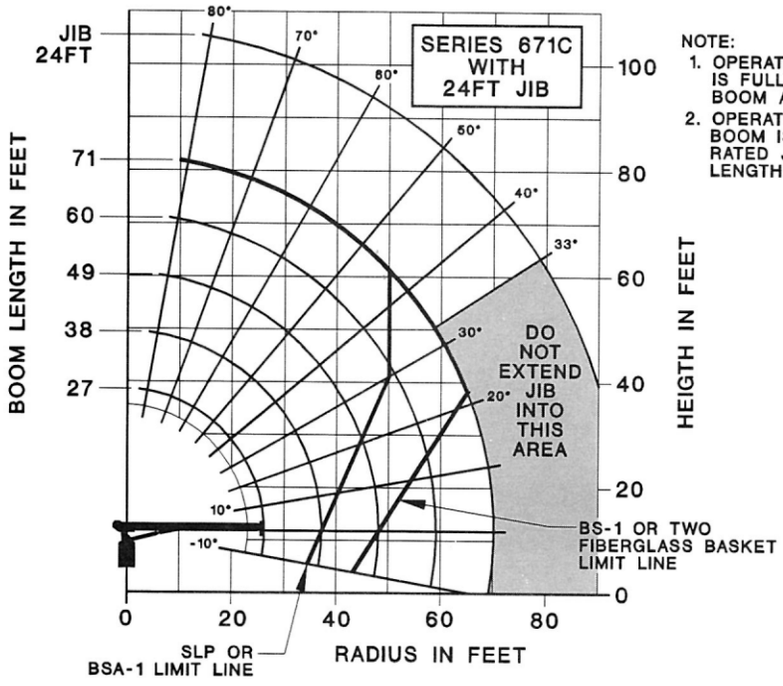

NOTE:
1. OPERATE WITH JIB BY RADIUS, WHEN MAIN BOOM IS FULLY EXTENDED. IF NECESSARY INCREASE BOOM ANGLE TO MAINTAIN LOADED RADIUS.
2. OPERATE WITH JIB BY BOOM ANGLE WHEN MAIN BOOM IS NOT FULLY EXTENDED. DO NOT EXCEED RATED JIB CAPACITIES AT ANY REDUCED BOOM LENGTHS.

JIB LOAD RATINGS

LOAD RADIUS (FEET)	LOADED BOOM ANGLE	24FT JIB (LBS)
20	79	4,600
25	76	4,300
30	73	3,800
35	69.5	3,100
40	66.5	2,650
45	63	2,250
50	59.5	1,950
55	56	1,700
60	52	1,450
65	48	1,250
70	43.5	1,050
75	39	850
80	33.5	650

BOOM LOAD RATINGS

LOAD RADIUS (FEET)	LOADED BOOM ANGLE	27FT BOOM (LBS)	LOADED BOOM ANGLE	38FT BOOM (LBS)	LOADED BOOM ANGLE	49FT BOOM (LBS)	LOADED BOOM ANGLE	60FT BOOM (LBS)	LOADED BOOM ANGLE	71FT BOOM (LBS)
4.5	79.5	34,000								
8	71.5	20,750	77.5	19,000						
10	67	17,250	74.5	15,600	78.5	14,350				
12	62	14,950	71	13,400	76	12,150	79	11,250		
14	57	13,050	68	11,700	73.5	10,600	77	9,800	79.5	9,450
16	51.5	11,650	64.5	10,400	71	9,400	75	8,700	77.5	8,250
20	39	9,450	57.5	8,500	66	7,700	71.5	7,150	74.5	6,750
25	17	7,100	48.5	7,050	59.5	6,350	66	5,750	70	5,400
30			37	5,800	52.5	5,300	60.5	4,800	66	4,500
35			20	4,550	44.5	4,500	55	4,100	61.5	3,900
40					35	3,850	48.5	3,550	56.5	3,300
45					21.5	3,100	41.5	3,100	51.5	2,900
50							33.5	2,650	46	2,550
55							22.5	2,200	40	2,200
60									32.5	1,900
65									23	1,600
70									1.5	850
	0	5,400	0	3,200	0	2,000	0	1,300	0	800

LOADLINE EQUIPMENT DEDUCT

DOWNHAUL WEIGHT = 150

ONE SHEAVE BLOCK = 200

TWO SHEAVE BLOCK = 355

View thousands of Crane Specifications on FreeCraneSpecs.com

National Series 600C
Load Rating Charts (continued)

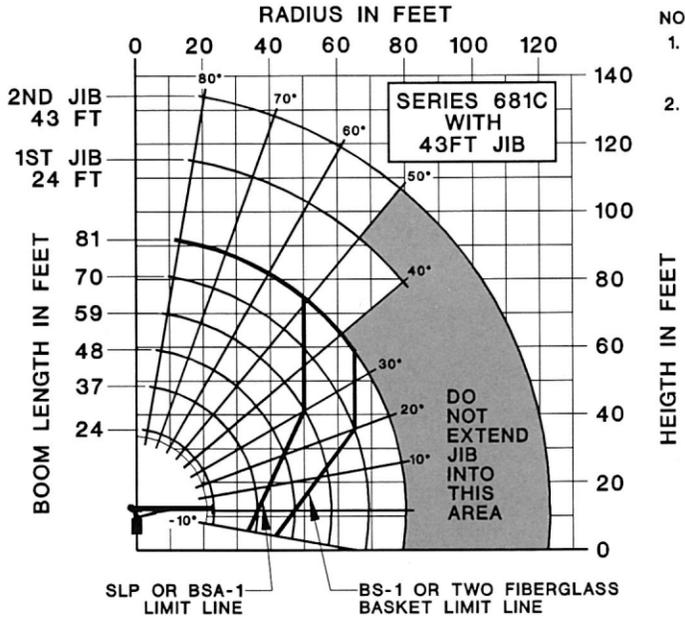

NOTE:

1. OPERATE WITH JIB BY RADIUS, WHEN MAIN BOOM IS FULLY EXTENDED. IF NECESSARY INCREASE BOOM ANGLE TO MAINTAIN LOADED RADIUS.
2. OPERATE WITH JIB BY BOOM ANGLE WHEN MAIN BOOM IS NOT FULLY EXTENDED. DO NOT EXCEED RATED JIB CAPACITIES AT ANY REDUCED BOOM LENGTHS.

JIB LOAD RATINGS

LOAD RADIUS (FEET)	LOADED BOOM ANGLE	24FT JIB (LBS)	LOADED BOOM ANGLE	43FT JIB (LBS)
20	78	3,200		
25	77.5	2,800	79.5	2,000
30	74.5	2,500	77.5	1,700
35	72	2,200	75	1,500
40	69	1,900	73	1,300
45	66	1,600	70.5	1,100
50	63	1,400	68	1,000
55	60	1,200	65.5	900
60	57	1,000	63	800
65	53.5	800	60.5	700
70	50	700	57.5	600
75	46	600		

BOOM LOAD RATINGS

LOAD RADIUS (FEET)	LOADED BOOM ANGLE	24FT BOOM (LBS)	LOADED BOOM ANGLE	37FT BOOM (LBS)	LOADED BOOM ANGLE	48FT BOOM (LBS)	LOADED BOOM ANGLE	59FT BOOM (LBS)	LOADED BOOM ANGLE	70FT BOOM (LBS)	LOADED BOOM ANGLE	81FT BOOM (LBS)
4.5	78.5	34,000										
8	69.5	22,050	77.5	19,350								
10	64	18,250	74.5	15,850	78.5	14,350						
12	58	15,650	71	13,600	76	12,150	79	10,950				
14	52	13,850	67.5	11,900	73.5	10,650	77	9,550	79.5	8,800		
16	45.5	12,350	64	10,600	71	9,450	75	8,500	78	7,800		
20	28.5	9,750	56.5	8,700	65.5	7,750	71	7,050	74.5	6,400	77	6,150
25			47	7,250	59	6,400	66	5,700	70.5	5,200	73.5	4,950
30			35	5,950	51.5	5,350	60.5	4,800	66	4,350	69.5	4,100
35			15	4,500	43.5	4,550	54.5	4,100	61	3,750	65.5	3,500
40					33	3,850	48	3,550	56.5	3,250	61.5	3,050
45					18	3,100	40.5	3,100	51	2,850	57.5	2,650
50							32	2,675	45.5	2,500	53	2,350
55							20	2,200	39	2,200	48	2,050
60									31.5	1,850	43	1,800
65									21.5	1,550	37.5	1,550
70											30.5	1,300
75											22	1,050
80											3.5	550
	0	6,400	0	3,450	0	2,150	0	1,350	0	800		

LOADLINE EQUIPMENT DEDUCT

DOWNHAUL WEIGHT = 150

ONE SHEAVE BLOCK = 200

TWO SHEAVE BLOCK = 355

View thousands of Crane Specifications on FreeCraneSpecs.com

The capacities shown will be reduced when accessories are attached to the boom or loadline.

Note: Rated loads do not exceed 85% of the tipping load. Structural strength ratings in the chart below are shaded.

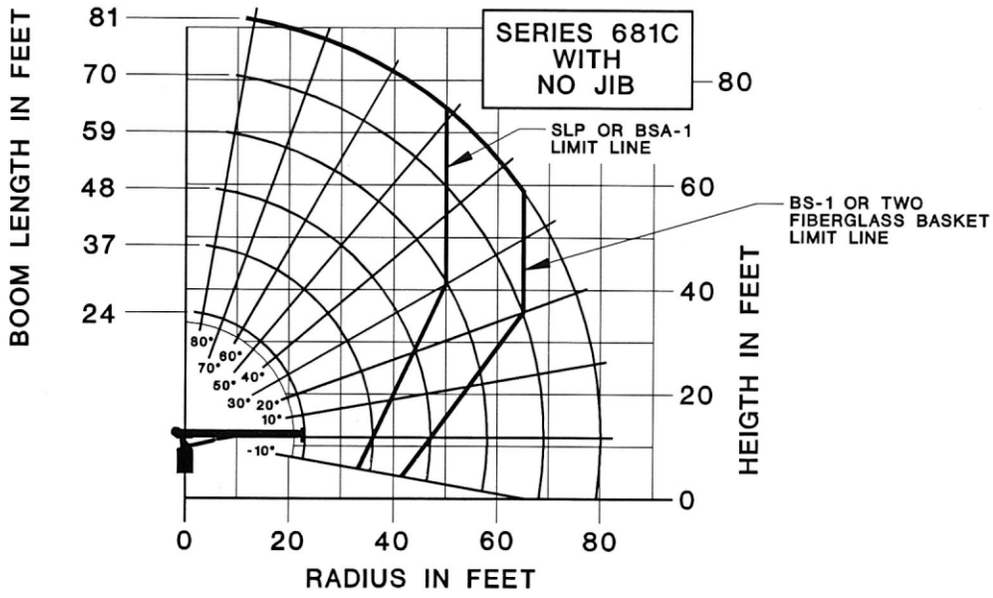

LOAD RADIUS (FEET)	LOADED BOOM ANGLE	24FT BOOM (LBS)	LOADED BOOM ANGLE	37FT BOOM (LBS)	LOADED BOOM ANGLE	48FT BOOM (LBS)	LOADED BOOM ANGLE	59FT BOOM (LBS)	LOADED BOOM ANGLE	70FT BOOM (LBS)	LOADED BOOM ANGLE	81FT BOOM (LBS)
					LOAD RATINGS							
4.5	79	34,000										
8	69.5	22,500	78	19,600								
10	64	18,700	74.5	16,200	78.5	14,800						
12	58.5	16,100	71	13,900	76	12,400	79.5	11,500				
14	52.5	14,300	67.5	12,200	73.5	10,900	77	9,800	80	9,200		
16	45.5	12,700	64	10,900	71	9,700	75	8,800	78	8,000		
20	28.5	10,100	57	9,000	66	8,000	71.5	7,300	75	6,800	77	6,500
25			47.5	7,500	59.5	6,600	66.5	6,000	70.5	5,400	73.5	5,200
30			35.5	6,200	52	5,500	60	5,000	66.5	4,500	70	4,400
35			16	4,800	43.5	4,700	55	4,300	61.5	3,900	66	3,700
40					33.5	4,000	48.5	3,700	56.5	3,400	62	3,200
45					19	3,250	41	3,200	51.5	2,900	58	2,800
50							32.5	2,750	45.5	2,600	53.5	2,450
55							20.5	2,300	39.5	2,200	48.5	2,100
60									32	1,850	43.5	1,800
65									22	1,550	37.5	1,550
70											31	1,300
75											22.5	1,050
80											3.5	550
	0	6,400	0	3,600	0	2,250	0	1,400	0	800		

LOADLINE EQUIPMENT DEDUCT

DOWNHAUL WEIGHT = 150

ONE SHEAVE BLOCK = 200

TWO SHEAVE BLOCK = 355

View thousands of Crane Specifications on FreeCraneSpecs.com

National Series 600C
Load Rating Charts (continued)

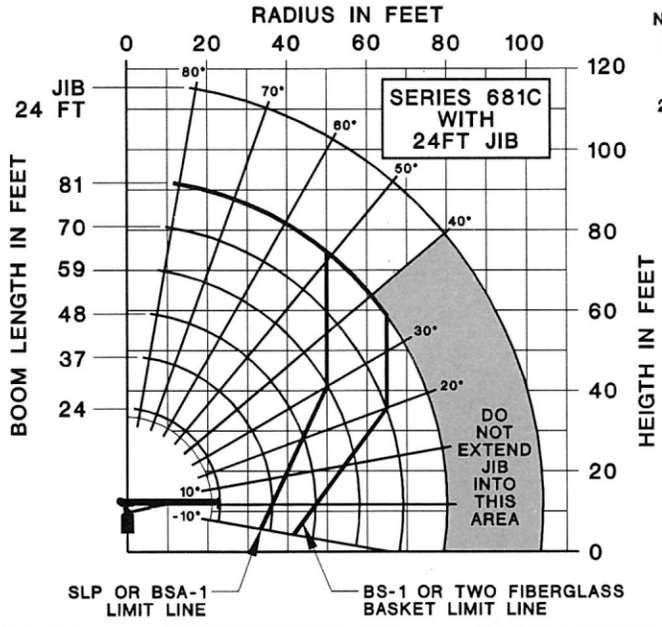

NOTE:

1. OPERATE WITH JIB BY RADIUS, WHEN MAIN BOOM IS FULLY EXTENDED. IF NECESSARY INCREASE BOOM ANGLE TO MAINTAIN LOADED RADIUS.
2. OPERATE WITH JIB BY BOOM ANGLE WHEN MAIN BOOM IS NOT FULLY EXTENDED. DO NOT EXCEED RATED JIB CAPACITIES AT ANY REDUCED BOOM LENGTHS.

JIB LOAD RATINGS

LOAD RADIUS (FEET)	LOADED BOOM ANGLE	24FT JIB (LBS)
20	78	3,200
25	77.5	2,800
30	74.5	2,500
35	72	2,200
40	69	1,900
45	66	1,600
50	63	1,400
55	60	1,200
60	57	1,000
65	53.5	800
70	50	700
75	46	600

BOOM LOAD RATINGS

LOAD RADIUS (FEET)	LOADED BOOM ANGLE	24FT BOOM (LBS)	LOADED BOOM ANGLE	37FT BOOM (LBS)	LOADED BOOM ANGLE	48FT BOOM (LBS)	LOADED BOOM ANGLE	59FT BOOM (LBS)	LOADED BOOM ANGLE	70FT BOOM (LBS)	LOADED BOOM ANGLE	81FT BOOM (LBS)
4.5	78.5	34,000										
8	69.5	22,050	77.5	19,350								
10	64	18,250	74.5	15,850	78.5	14,350						
12	58	15,650	71	13,600	76	12,150	79	10,950				
14	52	13,850	67.5	11,900	73.5	10,650	77	9,550	79.5	8,800		
16	45.5	12,350	64	10,600	71	9,450	75	8,500	78	7,800		
20	28.5	9,750	56.5	8,700	65.5	7,750	71	7,050	74.5	6,400	77	6,150
25			47	7,250	59	6,400	66	5,700	70.5	5,200	73.5	4,950
30			35	5,950	51.5	5,350	60.5	4,800	66	4,350	69.5	4,100
35			15	4,500	43.5	4,550	54.5	4,100	61	3,750	65.5	3,500
40					33	3,850	48	3,550	56.5	3,250	61.5	3,050
45					18	3,100	40.5	3,100	51	2,850	57.5	2,650
50							32	2,675	45.5	2,500	53	2,350
55							20	2,200	39	2,200	48	2,050
60									31.5	1,850	43	1,800
65									21.5	1,550	37.5	1,550
70											30.5	1,300
75											22	1,050
80											3.5	550
	0	6,400	0	3,450	0	2,150	0	1,350	0	800		

LOADLINE EQUIPMENT DEDUCT

DOWNHAUL WEIGHT = 150

ONE SHEAVE BLOCK = 200

TWO SHEAVE BLOCK = 355

View thousands of Crane Specifications on FreeCraneSpecs.com

The capacities shown will be reduced when accessories are attached to the boom or loadline.

Note: Rated loads do not exceed 85% of the tipping load. Structural strength ratings in the chart below are shaded.

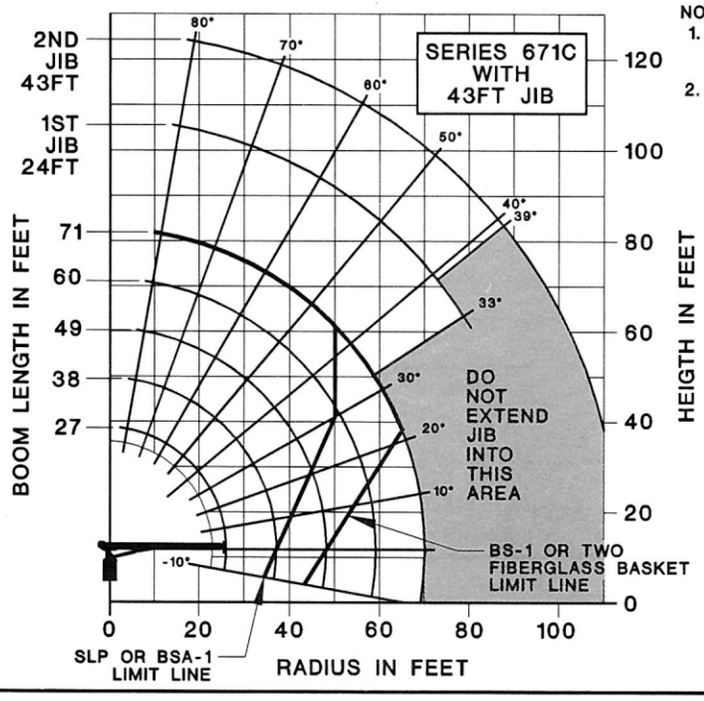

NOTE:
1. OPERATE WITH JIB BY RADIUS, WHEN MAIN BOOM IS FULLY EXTENDED. IF NECESSARY INCREASE BOOM ANGLE TO MAINTAIN LOADED RADIUS.
2. OPERATE WITH JIB BY BOOM ANGLE WHEN MAIN BOOM IS NOT FULLY EXTENDED. DO NOT EXCEED RATED JIB CAPACITIES AT ANY REDUCED BOOM LENGTHS.

JIB LOAD RATINGS

LOAD RADIUS (FEET)	LOADED BOOM ANGLE	24FT JIB (LBS)	LOADED BOOM ANGLE	43FT JIB (LBS)
20	79	4,600		
25	76	4,300	78.5	2,900
30	73	3,800	76.5	2,650
35	69.5	3,100	74	2,400
40	66.5	2,650	71.5	2,200
45	63	2,250	69	2,000
50	59.5	1,950	66	1,800
55	56	1,700	63	1,600
60	52	1,450	60	1,400
65	48	1,250	57	1,250
70	43.5	1,050	54	1,100
75	39	850	51	950
80	33.5	650	47	800
85			43.5	700
90			39.5	600

BOOM LOAD RATINGS

LOAD RADIUS (FEET)	LOADED BOOM ANGLE	27FT BOOM (LBS)	LOADED BOOM ANGLE	38FT BOOM (LBS)	LOADED BOOM ANGLE	49FT BOOM (LBS)	LOADED BOOM ANGLE	60FT BOOM (LBS)	LOADED BOOM ANGLE	71FT BOOM (LBS)
4.5	79.5	34,000								
8	71.5	20,750	77.5	19,000						
10	67	17,250	74.5	15,600	78.5	14,350				
12	62	14,950	71	13,400	76	12,150	79	11,250		
14	57	13,050	68	11,700	73.5	10,600	77	9,800	79.5	9,450
16	51.5	11,650	64.5	10,400	71	9,400	75	8,700	77.5	8,250
20	39	9,450	57.5	8,500	66	7,700	71.5	7,150	74.5	6,750
25	17	7,100	48.5	7,050	59.5	6,350	66	5,750	70	5,400
30			37	5,800	52.5	5,300	60.5	4,800	66	4,500
35			20	4,550	44.5	4,500	55	4,100	61.5	3,900
40					35	3,850	48.5	3,550	56.5	3,300
45					21.5	3,100	41.5	3,100	51.5	2,900
50							33.5	2,650	46	2,550
55							22.5	2,200	40	2,200
60									32.5	1,900
65									23	1,600
70									1.5	850
	0	5,400	0	3,200	0	2,000	0	1,300	0	800

LOADLINE EQUIPMENT DEDUCT

DOWNHAUL WEIGHT = 150

ONE SHEAVE BLOCK = 200

TWO SHEAVE BLOCK = 355

View thousands of Crane Specifications on FreeCraneSpecs.com

National Series 600C Truck Specifications

Mounting Configurations The versatility of the Series 600C can be enhanced by the mounting configurations described at the right. The configurations are based on the Series 600C with an 85% stability factor. The complete unit must be installed in accordance with factory requirements and a test performed to determine actual stability and counterweight requirements since individual truck chassis vary.	**Configuration 1 with Torsion Box** This configuration is the least expensive method for the Series 600C. This mount, with the crane mounted behind the cab, requires the least weight of all mounts for stability, thus, you can haul larger payloads on your truck. It requires standard subbase and rear (ASH) stabilizers.	**Configuration 2 with Torsion Box** This mount requires front SFO stabilizer to give the machine full capacity 360° around the truck. Care must be taken in the selection of the truck. It must meet the minimum requirements below. The front stabilizer gives the machine a solid base, helping the operator control the loads precisely. Requires front SFO and rear ASH stabilizers and a subbase. The truck frame must be made from 110,000 PSI steel. See "Truck Frame and Mounting Bolt Requirements for Front Stabilizer" statement on page 13. Contact the factory for details.
Stable	180°	360°
Gross Axle Weight Rating (GAWR), front	12,000 lbs.	12,000 lbs.
Gross Axle Weight Rating (GAWR), rear	34,000 lbs.	34,000 lbs.
Wheelbase (WB)	681C: 222"; 671C: 234"	681C: 222"; 671C: 234"
Cab to Axle/trunnion (CA/CT)	681C: 144"; 671C: 156"	681C: 144"; 671C: 156"
Frame Section Modulus (SM) under crane: 50,000 PSI, or	35.0 inch³	Not applicable (see note above)
110,000 PSI	15.9 inch³	20.0 inch³
Frame Section Modulus (SM) over rear stabilizers: 50,000 PSI or	17.0 inch³	Not applicable (see note above)
110,000 PSI	13.0 inch³	13.0 inch³
Stability Weight, Front	7,000 lbs. minimum; 7,500 lbs. maximum*	7,000 lbs. minimum; 7,400 lbs.maximum*
Stability Weight, Rear	8,600 lbs. minimum*	8,600 lbs. minimum*
Estimated Average Final Weight (671C)	31,000 lbs.	31,300 lbs.

Notes:

(1) GAWR means Gross Axle Weight Rating and is dependent on all components of the vehicle such as axles, tires, springs, frame, etc. meeting manufacturer's recommendations. **Always specify GAWR when purchasing trucks.**

2) Minimum axle requirements may increase with use of longer wheelbase, service bodies, diesel engines, or front stabilizers.

(3) Diesel engines require variable speed governor and energize-to-run fuel solenoid for smooth crane operation.

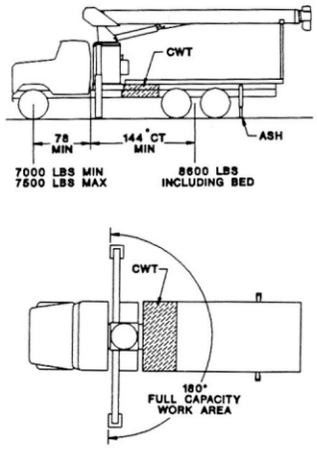

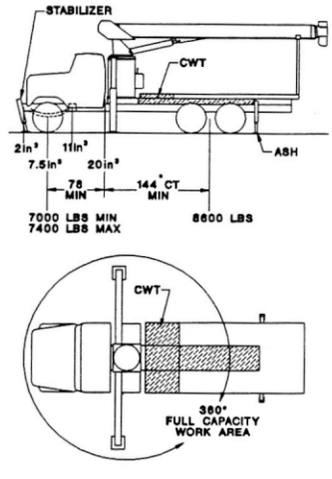

*Estimated axle scale rates prior to installation of crane, stabilizers, and subbase for 85% stability.

View thousands of Crane Specifications on FreeCraneSpecs.com

Configuration 3 with Torsion Box
The advantages of a rear-mounted Series 600C are: (1) allows the operator to effectively use the close-in work area to lift heavier loads; and (2) 360° stability at full-rated load. Hydraulic out-and-down outriggers located behind the cab are necessary to keep the total weight of the unit to a minimum with full stability. Requires front over frame outriggers, rear stabilizer, and heavy-duty rear-mount subbase.
360°
12,000 lbs.
34,000 lbs.
222 inches
156 inches minimum
35.0 inch³
15.9 inch³
35.0 inch³
15.9 inch³
7,000 lbs. minimum; 9,100 lbs. maximum*
8,200 lbs. minimum*
32,000 lbs.

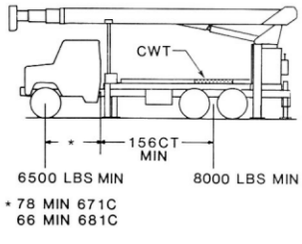

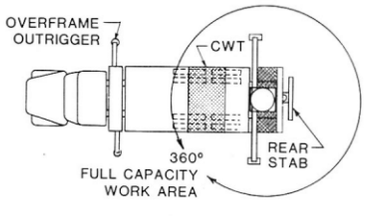

Truck Frame and Mounting Bolt Requirements for Front Stabilizer

The truck frame must have adequate strength from under the truck frame through the front suspension to the bumper assembly for front stabilizer installation. A truck frame yield strength of 110,000 PSI is required.

The following diagram shows the required section modulus at various stations along the front end of the truck frame for a standard behind-the-cab mount.

Note in the sample cross sections that the truck frame top flange width is decreased in the engine compartment area. Also note that almost half the truck frame channel is removed at the very front of the frame on the standard truck frame.

In order to safely mount a front stabilizer in place of the normal front bumper, a minimum bolt pattern as shown is required. The bracket must be capable of supporting .50 DIA, Grade 8 bolts to their normal breaking strength. Torque the mounting bolts supplied with the front stabilizer to 110 ft-lb. Do not use spacers between the bumper bracket and the front stabilizer bumper assembly. If the bumper bracket and front of the truck frame do not meet these specifications, an extended frame truck must be used. Contact the factory for details. Details for mounting a stabilizer on an extended frame truck are included in the installation instructions. However, the Section Modulus requirements outlined above do still apply.

Standard Truck Frame -- for angled single front stabilizer only

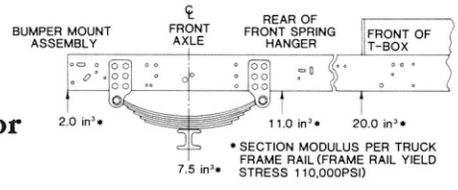

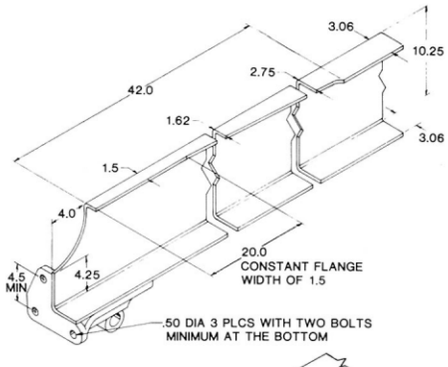

Extended Truck Frame -- for angled or straight down single front stabilizer

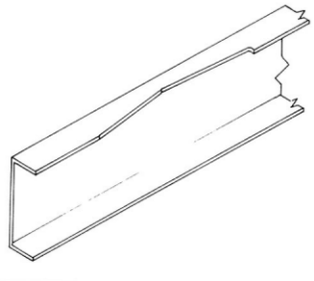

View thousands of Crane Specifications on FreeCraneSpecs.com

National Series 600C Accessories

Every Series 600C is part of the National Lifting System, a choice of accessories that add versatility to your crane. With National accessories you can tailor your crane to handle your specific job requirements. In many instances, a truck-mounted crane equipped with accessories can eliminate your need for other specialized equipment.

Because your 600C affords such versatility, you save time, money, and manpower. You can do more, faster, and with less equipment. National accessories are cost-efficient options.

Note:

Weights of all accessories attached to the boom or loadline of the crane must be deducted from the effective lifting capacity. Consult your National dealer for specific accessory availability. Some accessories cannot be used in combination with other accessories and/or certain boom/jib combinations.

Remote Control

National offers one-hand remote control for your Series 600C. Ideal where precise control and total load visibility are required.

Fine metering and instant response mean operators can position loads or work platforms easily.

National's remote controls are built with solid-state circuitry and few moving parts. They are designed for reliability. You will be impressed with the high operating speeds and modular design.

Available in two models: R4 with tilt, turn, telescope and winch functions, and R3 with tilt, turn, and telescope only. R3 is to be used to control cranes from boom-attached platforms and baskets.

A priority control valve, operated by a trigger on the remote control device, regulates oil flow and gives you fingertip speed control over all crane functions.

National's remote control is lightweight and easy to use. Consult your dealer or the factory for availability.

Model R3
Tilt, turn and telescope
Model R4
Tilt, turn, telescope and winch

Capacity Alert System

National offers two capacity alert options. The audible-visual capacity alert system is designed to alert the operator when he reaches a maximum capacity condition on the crane structure. This system activates the truck horn when capacity load is exceeded on the **main boom**.

The hydraulic capacity alert system is a hydraulically operated, maximum capacity sensing device that is designed to stop all of the normal crane functions that cause overload when maximum capacity is exceeded on the **main boom**. Neither of these systems is applicable to jib and stability capacities.

Model AAS
(Audible capacity alert system)
Model HAS
(Hydraulic capacity alert system)

One Person Basket

Strong, lightweight fiberglass basket with 300-pound capacity puts personnel where you want them for tough maintenance and installation jobs. Optional dual basket brackets for two-basket operation on main boom. Easy on-off safety belts included. With basket(s) attached to the crane, the crane must be operated at a position where the crane load chart shows less than the following capacities:

- One fiberglass basket -- 550 pounds
- Two fiberglass baskets -- 1,100 pounds

Model B1
Model B1-L
With lock

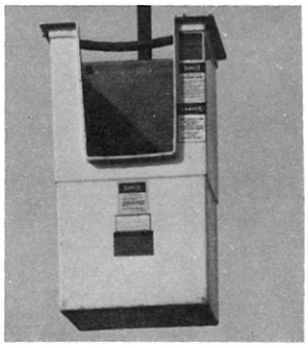

Heavy-duty Personnel Basket

New high-capacity steel personnel basket provides a rated lifting capacity of 1,200 pounds and safety loops to secure up to four passengers.* Dimensions are 72"x42"x42". Ideal for simultaneously lifting personnel, tools, and materials to above-the-ground job sites. A fast attachment system allows fast, easy pinning of basket to the boom. The gravity-leveling basket has a new, secure disc-brake locking system.

Model BSA-1

**This basket must not be used in load-rated areas where the crane load chart shows capacities less than 2,300 pounds.*

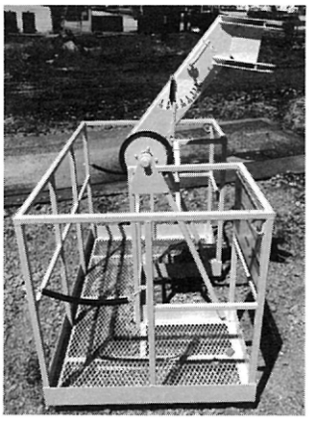

Caution

Do not operate crane booms, jib extensions, any accessories, or loads within 10 feet (3m) of live power lines or other conductors of electricity.
Do not exceed jib capacities at any reduced boom lengths.

View thousands of Crane Specifications on FreeCraneSpecs.com

Personnel Platform

This extra strength 3x6-foot steel platform will crarry up to 1,000 pounds and operate at working heights up to 90 feet. It is hydraulically self-leveling and protected by safety valves. Safety harness included. Fold down sides standard.

Optional manual rotator available for precise placement of platform. Easy-to-operate crank rotates the platform through a dependable chain drive. Continuous rotation. Locks in position.

The personnel platform must not be operated on load rated areas where the load chart shows capacities less than 2,000 pounds on Model SLP and 2,200 pounds on Model SLPR. Can be used with angling jib for additional reach.

Model SLP
Model SLPR

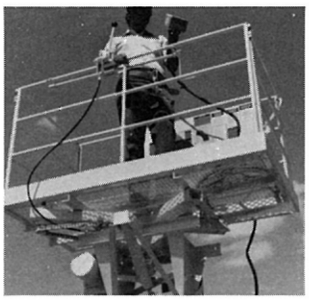

Three Pump System

This optional pump system provides three separate (or individual) hydraulic circuits for independent operation of winch, swing, and crane functions. The option increases productivity on high cycle jobs and facilitates the ease of operation.

Stabilizers/Outriggers

We offer a complete range of front and rear stabilizers with hydraulic vertical and horizontal motion. All cylinders are fully enclosed for protection against dirt and on-the-job damage.

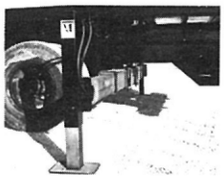

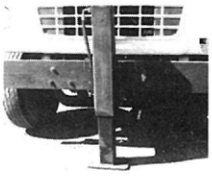

Stabilizers

	Rear Mounted (Model ASH)	Rear Mounted (Model RSOD)	Front Mounted* (Model SFOA Fixed)
Vertical travel	20"	25.5"	25"
Ground penetration (38" frame height)	8"	10"	13"
Operation	All-hydraulic	All-hydraulic	All-hydraulic
Span	10'	14'	Single
Controls	Stabilizers shown above can be operated from either control station		

Cross-frame Outriggers

Extended span.....15'6"
Retracted span.....7'11"
Vertical travel
Over-frame.....25"
Under-frame.....18"
Ground penetration
(38" frame height)....10"
Mounting space
Outrigger only.....24"

Model 6HO

**The SFOA is a single front-mounted hydraulic stabilizer. It is designed to lift the vehicle and will provide stability for the vehicle after it has been leveled.*

Hydraulic Oil Cooler

Automatic hydraulic device designed to cool the hydraulic oil under high-cycle operation.

Model HOC

Pallet Fork

Turns your Series 600C into a versatile, payload-packing fork lift. Great for delivering palleted material right where you want it. 4,400-pound (1,996-kg) capacity with adjustable throat and teeth. Handles most loads with ease.

Capacity.....4,400 lbs. at 20" center
Throat opening....41" to 65" (adjustable)
Tooth length.....38"
Tooth width.....33.5" to 57" Outside to min. max. outside
Weight.....350 lbs.

Model MKF
(Manual leveling, adjustable throat)

Loose Material Clam Bucket

Increase the flexibility of your Series 600C with a National clam bucket. Use this versatile accessory to load or move up to 2/3 cubic yard of loose material with each bite. Hooks easily to loadline, comes with hydraulic hose on automatic reel and quick-connect fittings. Extension hoses are required for use with jibs. Just position the load where you want it and open the bucket.

Model LMC

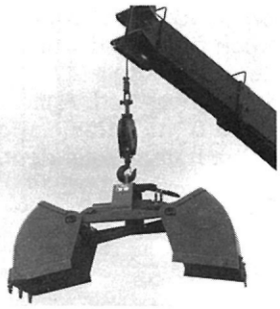

View thousands of Crane Specifications on FreeCraneSpecs.com

National Series 600C Specifications

General Construction:

Low-alloy, high tensile, and other steel including T-1, Ex-Ten, Stressproof and Hi-Yield are combined with special low hydrogen welding techniques wherever advantageous. Standard color: painted National Ivory.

Frame:

Box construction for maximum strength and rigidity.

Turret:

Fabricated rigid structure, well-braced for stability. Line-bored and machined after welding to ensure proper alignment.

Rotation:

375°, rotational force 239,532 in-lb. Turret rotation is by hydraulic orbit motor and planetary gearbox driving a pinion. The turret rotates on a ball-bearing race. Spring applied hydraulic release brake provides positive, no-drift lateral positioning.

Subbase:

Unitized box construction designed to increase torsional stiffness and reduce truck frame requirements. Standard subbase is designed to fit on standard 34" wide truck frame and will accommodate a 20' stringerless bed. Attaches both to truck frame and crane frame. Total depth of subbase is 8.0".

Outriggers

"A" frame box-type 19'4" span (center of pad at ground level) moves out-and-down, will not bind when raising or lowering truck. Can be positioned to 10.5" below ground level on 38" truck frame height.

Tilt:

Double-acting hydraulic cylinder raises and lowers boom; butt-mounted safety holding valve prevents boom falling in event of hose failure. Heavy-duty, long-life pivot bearings.

Boom:

Boxed construction; telescopes proportionally under rated load on nylon plates impregnated with molybdenum disulfide for smooth, long-life operation. Boom cylinder and valves are easily serviced. Heavy-duty, long-life pivot bearings. "Easy Glide" wear pads reduce noisy boom "chatter" and vibration, enhance smooth and quiet operation, are easy to replace, and reduce wear and maintenance.

Winch:

Hydraulic geroller motor with planetary gear reduction brake and counterbalance valve for "power down" load lowering. 10,000 pounds bare drum single-line pull available with 280 feet of 9/16 inch, 19.25 ton breaking strength loadline. Optional "Burst-of-Speed" control increases payout and pick-up of unloaded cable 60% over normal operating speed.

Rear Stabilizer

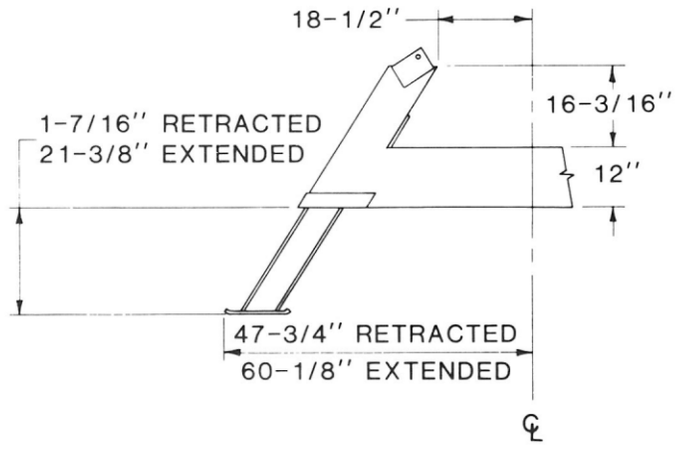

Pumps:

Tandem Vickers, high-pressure, high-speed balanced vane, replaceable cartridge-type, providing 23 gpm to crane functions and 34 gpm to winch.

Cylinders:

Shaft packing: Polyurethane cup-type. Shafts: Hi-Yield stress relieved, chrome-plated. Piston sets: Polyurethane U-cups with glass reinforced nylon bearings. Cylinder barrels: Micro-honed tubing and safety check valves.

Valves:

Four-way, spring-centered, spool-type with low spool force and extra-fine metering notches. Independent relief valves protect hydraulic circuit against overload. Relief valves are set at 2,850 psi (3,050 psi on winch system). Valves located for improved accessibility and ease of service.

Hose:

All high-pressure hose is wirebraid reinforced, having a minimum safety factor of 4 to 1.

Operating Speeds:

Winch 3rd wrap: 150 fpm. Boom up and down: 23-27 seconds. Boom out: 47 fpm. Boom in: 49 fpm. Turn: 42 seconds. When using remote control, crane function speeds will be reduced by 40% to assure smooth operation. (Speeds above assume no load with 23 gpm oil flow on boom and 34 gpm on winch).

Oil Tank Capacities:

75-gallon supply tank with breather, clean-out, suction strainers and removable magnetic plug.

View thousands of Crane Specifications on FreeCraneSpecs.com

Dimensional Specification

Series	Retracted Length	Extended Length	G	Dry* Wt/Lb	With Oil* Wt/Lb
681C	24 ft.	81 ft.	82 in.	13,850*	14,550*
671C	27 ft.	71 ft.	85 in.	13,500*	14,150*

*Weight includes all items except ASH (800#)

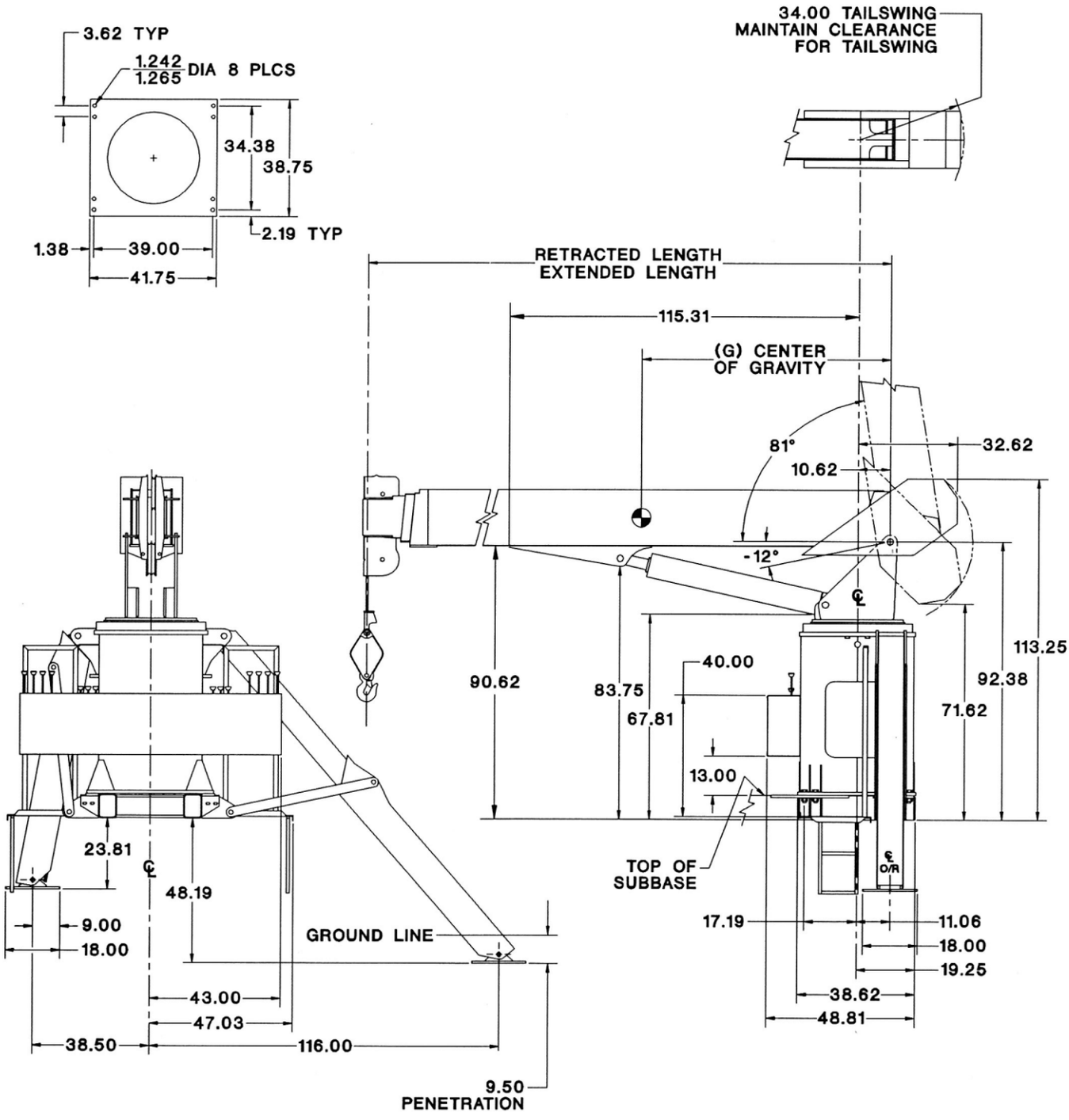

View thousands of Crane Specifications on FreeCraneSpecs.com

View thousands of Crane Specifications on FreeCraneSpecs.com

National Series 600C Proposal

Date:_____

Prepared for:

_____

_____

_____

Submitted by:

_____

_____
(Firm Name)

_____

_____
(Address)

_____

_____
(City & State)

_____
(Zip)

_____
(Phone)

Signed:

_____

_____

Description	Price
1. Series_____	$_____
2. Boom_____	_____
3. Jib_____	_____
4. Rear Stabilizers: ☐ RSOD ☐ HO ☐ ASH	_____
5. Front Stabilizers: ☐ SFO ☐ SFOA	_____
6. Line Block: ☐ 2-3 Part ☐ 4 Part ☐ 5 Part ☐ 6 Part	_____
Accessories	
7. _____	_____
8. _____	_____
9. _____	_____
10. _____	_____
Mounting	
11. Installation: Behind Cab ☐ Std. ☐ Special	_____
12. Installation: Rear Mounting (add to installation charge above)	_____
☐ Air Throttle	_____
☐ Rear Mounting Hydraulic Group	_____
☐ Heavy-duty Rear Mount Subbase	_____
☐ Rear Outriggers	_____
☐ HO Outriggers	_____
13. Frame Reinforcement: ☐ Weld ☐ Bolt Extra	_____
14. Platform Body_____ft. ☐ Wood ☐ Steel	_____
15. Weight in bed_____lbs. (if required)	_____
16. Boom Rest: ☐ Parallel ☐ Low ☐ Other ☐ Removeable	_____
17. Mount SFO or SFOA	_____
18. Mount Stabilizers	_____
19. Chassis	_____
20. Rear Bumper Underride Protection ☐ Ordered ☐ Not Ordered	_____
21. Freight	_____

This quotation will remain firm for_____days.

Accepted by_____ $_____
(Name) Total Price

_____ _____
(Firm Name) (Date)

View thousands of Crane Specifications on FreeCraneSpecs.com

National Series 600C Telescoping Crane

NATIONAL CRANE
A Grove Worldwide Company

General Offices: 11200 North 148th Street • Waverly, NE 68462
Phone: (402) 786-6300 • FAX (402) 786-6363

Your National Dealer:

National reserves the right to change designs, prices, and specifications at any time without notice.

Printed in U.S.A. Form No. S600C/795/4M/AA