View thousands of Crane Specifications on FreeCraneSpecs.com

33 TON MOBILIFT

by

LIFT SYSTEMS, INC.

Global Leaders in Specialized

Lifting Equipment!

View thousands of Crane Specifications on FreeCraneSpecs.com

MOBILIFT

33 TON

STANDARD EQUIPMENT

ENGINE:
GM 3.0L, 4 cylinder, 75 hp (56 Kw) propane engine

PUMP:
Sundstrand 40 series drive pump

CONTROL SYSTEM:
CARL (Computer Assisted Remote Lifting) Control System. Monitors Boom Angle, Boom Extension, Pressure, Counterweight Load Pin. Automatic Shutdown for overload conditions. Large easy to read display screen with push button navigation and dial adjustment.

CONTROLS:
Separate controls for each function.
Combination of foot pedal, joystick, and push button controls allows for multiple functions to be performed at the same time.

DRIVE:
Rockwell planetary drive axle. Full hydrostatic system with spring applied brakes.

WHEELS:
Front: qty. (4)
Diameter: 28”
Width: 12”
Rear: qty. (2)
Diameter: 28”
Width: 12”
Replaceable polyurethane composition

OSCILLATING REAR STEERING BOX:
Keeps all steering wheels in contact with ground.

GRADABILITY:
Unloaded maximum grade is 26%
Loaded maximum grade is 15%
18,000 lbs of draw bar pull unloaded

TRAVEL SPEED UNLOADED:
High Gear: 2.75 mph
Low Gear: 0.75 mph

TELESCOPING COUNTERWEIGHT:
Standard counterweight section telescopes 4’ using a hydraulic cylinder. Push button control.

HYDRAULIC RESERVOIR:
90 gallons (340 liters)

BOOM:
High strength three section telescoping boom with powered first section and manually extended second section . Replaceable wear pads on all sliding sections.

BOOM LIFT CYLINDER:
Single cylinder capable of lifting and lowering with a full load. Integral safety holding valve. Spherical bearing ensures constant alignment with the boom.

BOOM TELESCOPE CYLINDER:
Single cylinder capable of telescoping the boom in and out with a full load. Integral safety holding valve.

WINCH:
High performance hydraulic winch. Integral, full load brake. 400’ of high capacity 5/8” wire rope standard.

BLOCK:
35 (31.5) ton block standard. Low profile with swivel hook.

POWER BOOM LIFTING EYE:
Qty. (1) located on boom with 33 ton capacity.

WEIGHT:
32,000 lbs base unit
Standard “A” counterweight included

COUNTERWEIGHTS:
“A” - non-removable counterweight installed in unit
Four (4) additional counterweight plates included with fork lift loops standard. Weight of each plate is 5,500 lbs.
Total of additional counterweight is 22,000 lbs.

TIE DOWN / LIFTING EYES:
Tie down / lifting eyes installed for securing unit during transport and for lifting of the unit.

DRIVER PROTECTION GUARD:
Structural overhead guard for operator protection.

OTHER STANDARD FEATURES:
Back up alarm, horn, strobe light, operator seat complete with safety belt and electric switch.

OPTIONAL EQUIPMENT

RADIO REMOTE CONTROL:
Radio remote control allows full machine functionality from a wireless radio remote. Allows operator optimal view of load. Emergency safety shutdown switch is standard.

ANTI-TWO-BLOCK DEVICE:
Safety device installed to prevent hook block from contacting boom.

JIB EXTENSION:
Consult factory for available capacities

View thousands of Crane Specifications on FreeCraneSpecs.com

MOBILIFT

33 TON

DIMENSIONAL DATA

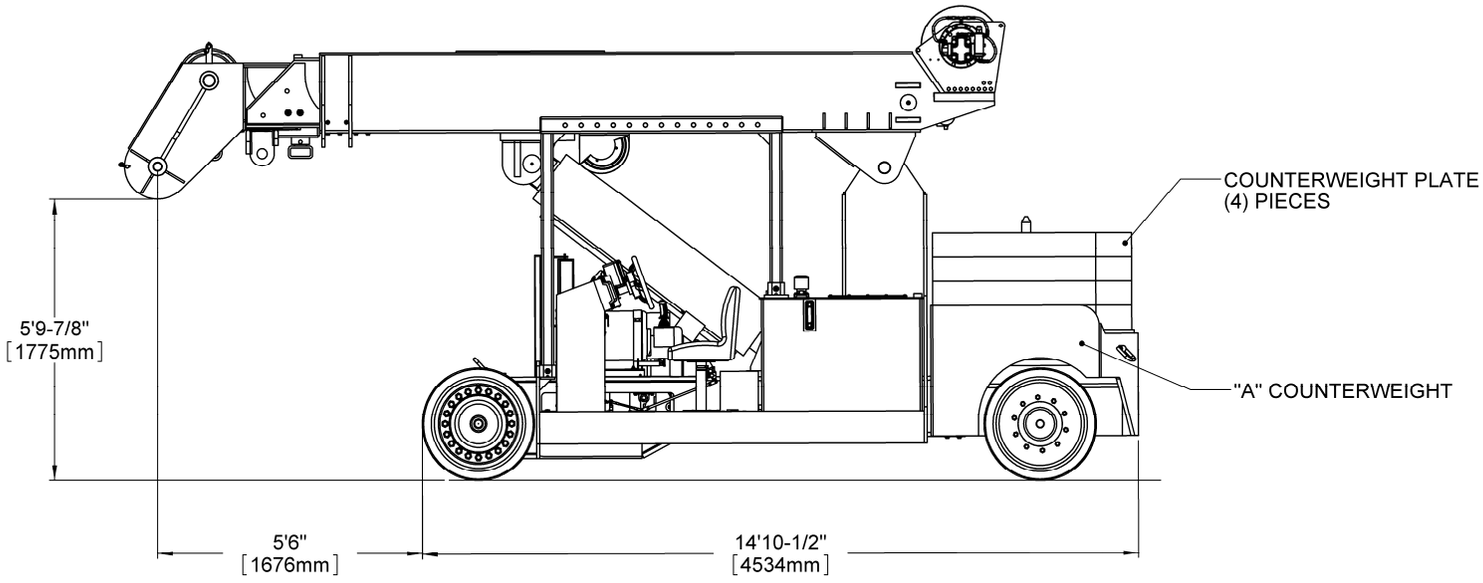

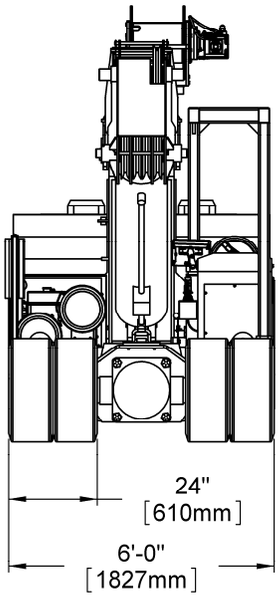

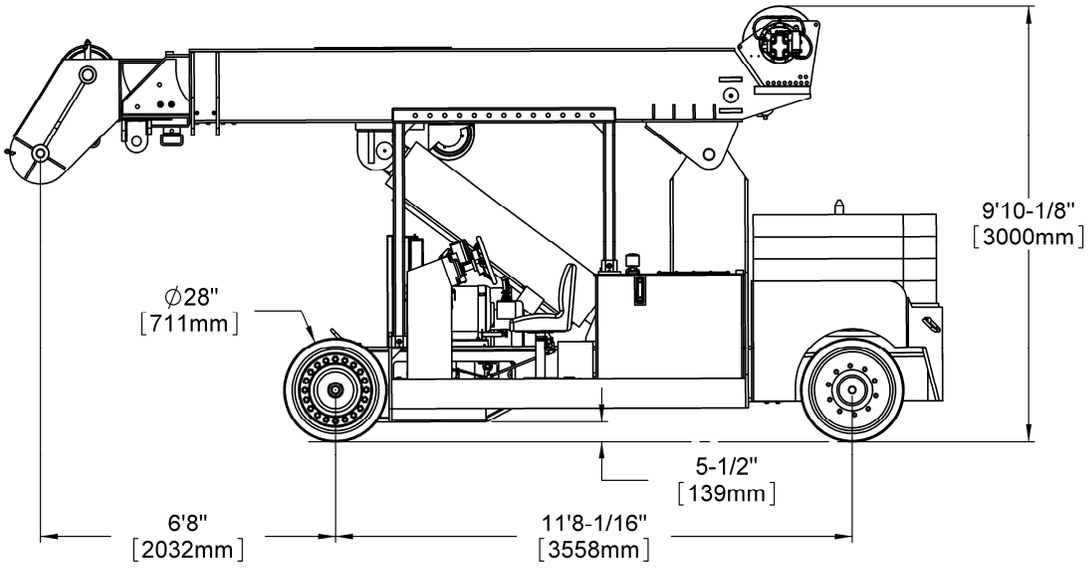

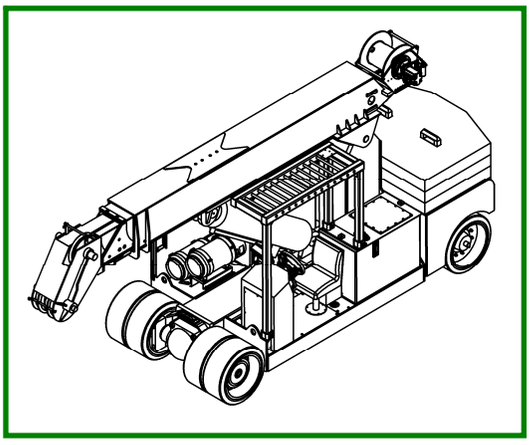

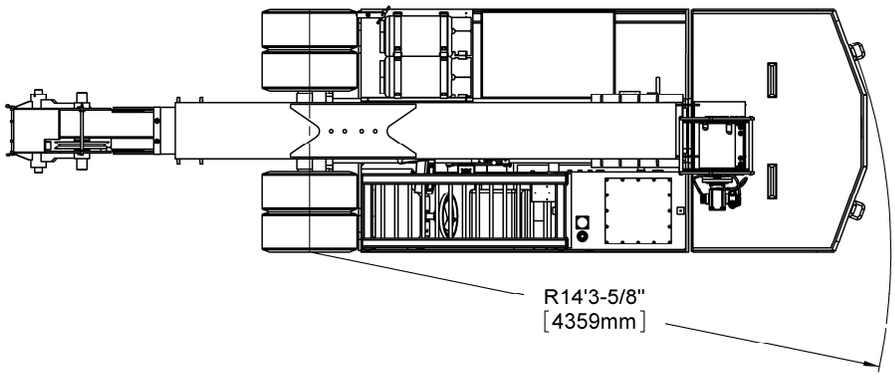

View thousands of Crane Specifications on FreeCraneSpecs.com

MOBILIFT

33 TON

REFERENCE CAPACITY / RANGE DIAGRAM

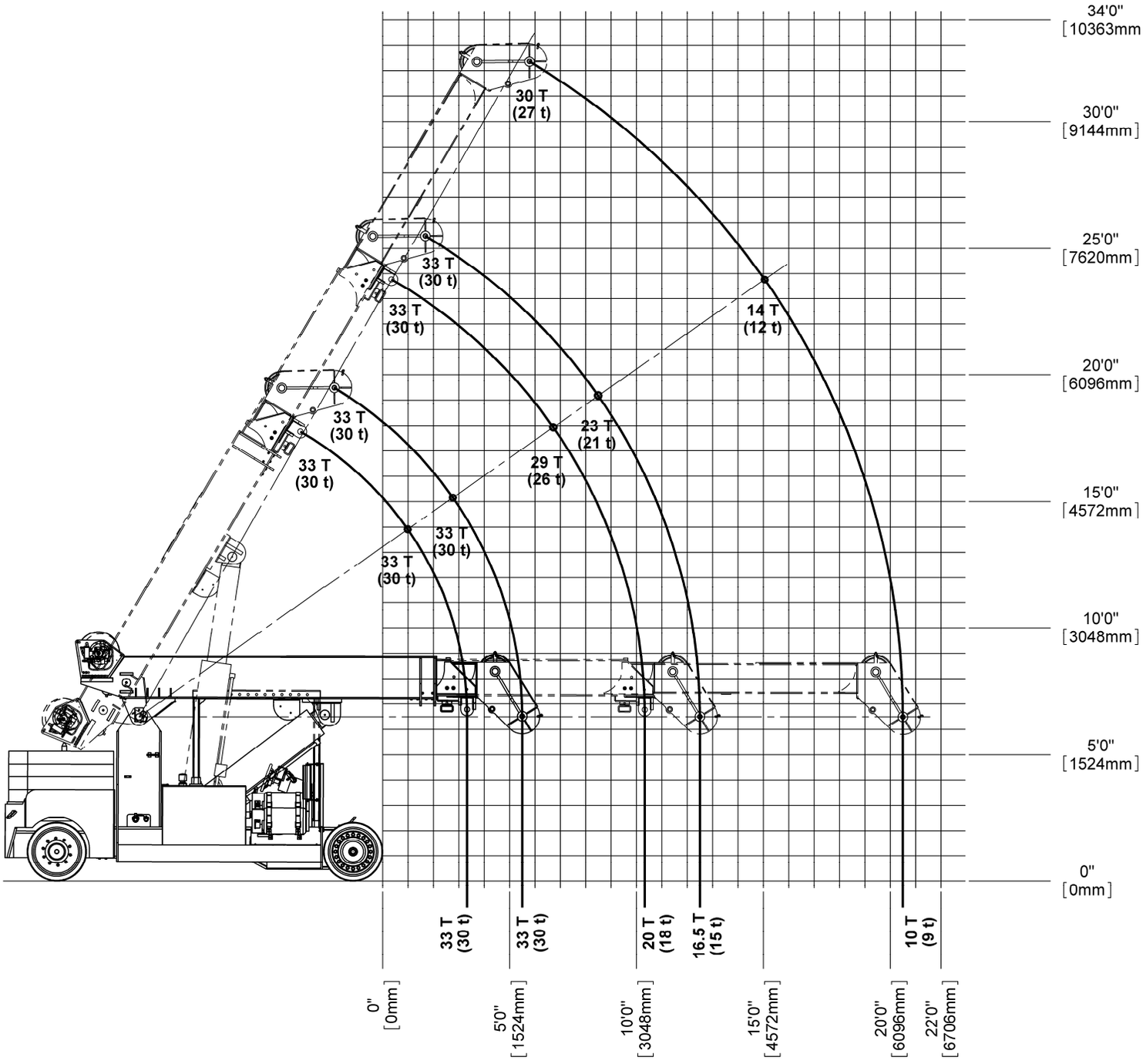

NOTE

1. **The above chart is for reference purposes only.**
2. **Never use the above chart for lift planning calculations**
3. **Lift plan calculations are to be determined solely by the load charts and range diagrams that are issued for the specific serial numbered machine that is to be used for the specific planned lift.**

View thousands of Crane Specifications on FreeCraneSpecs.com

MOBILIFT

33 TON

RANGE DIAGRAM

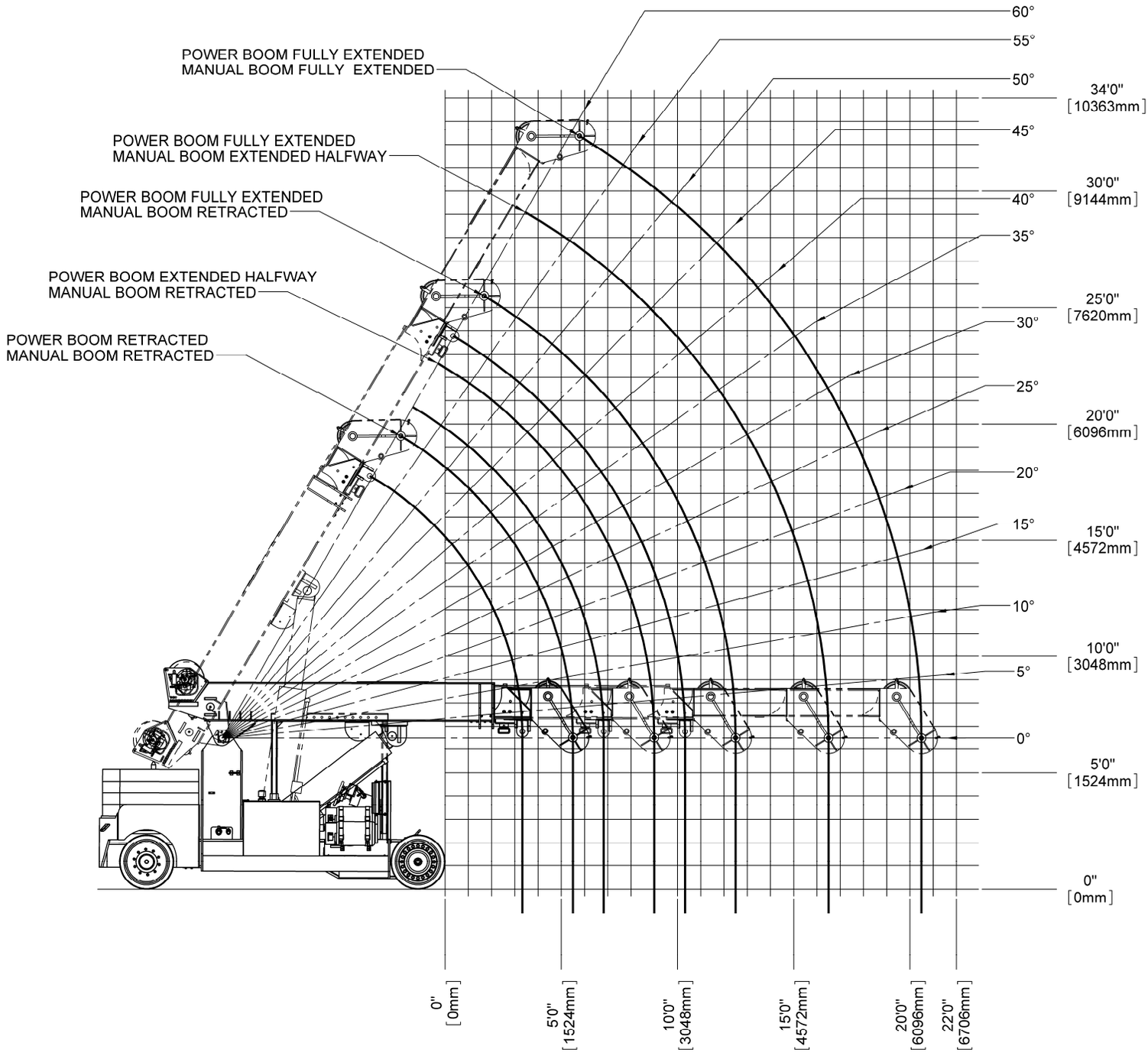

NOTE

1. **The above chart is for reference purposes only.**
2. **Never use the above chart for lift planning calculations**
3. **Lift plan calculations are to be determined solely by the load charts and range diagrams that are issued for the specific serial numbered machine that is to be used for the specific planned lift.**

View thousands of Crane Specifications on FreeCraneSpecs.com

MOBILIFT

33 TON

LOAD CHARTS FOR BASE UNIT WITH NO COUNTERWEIGHT

33 TON MOBILIFT LOAD CHART

MLLC229
2/17/2009

FOR USE WITH HOOK BLOCK ONLY
STANDARD NON-REMOVABLE "A" COUNTERWEIGHT

LOAD RADIUS (FEET FROM FRONT)	FULLY EXTENDED BOOM LENGTH (FEET) 15	15	22	22	30	30	FULLY RETRACTED BOOM LENGTH (FEET) 15	15	22	22	30	30
0	50	66,139	LOADED BOOM ANGLE		MANUAL FLY SECTION SEE NOTES		50	66,139	LOADED BOOM ANGLE		MANUAL FLY SECTION SEE NOTES	
1	45	66,139					45	66,139				
2	39	66,139	58	66,139			39	56,000	58	54,800		
3	33	51,000	55	50,000			33	41,900	55	40,900		
4	25	40,600	52	39,700	LOADED BOOM ANGLE		25	33,300	52	32,400	LOADED BOOM ANGLE	
5	14	33,600	48	32,700			14	27,400	48	26,600		
5.5	0	31,000					0	25,300				
6			45	27,700	59	28,800			45	22,500	59	23,500
7	SEE NOTE (E)		41	24,000	56	24,900	SEE NOTE (E)		41	19,300	56	20,300
8			37	21,000	54	21,900			37	16,900	54	17,800
9			32	18,600	52	19,500			32	14,900	52	15,800
10			27	16,700	49	17,500			27	13,300	49	14,100
11			21	15,100	47	15,800			21	12,000	47	12,700
12			18	13,700	44	14,400			12	10,800	44	11,600
12.5			0	13,100					0	10,300		
13					41	13,200					41	10,600
14					38	12,200					38	9,700
15					35	11,300					35	8,900
16					32	10,500					32	8,300
17					28	9,700					28	7,700
18					23	9,100					23	7,100
19					18	8,500					18	6,600
20					10	8,000					10	6,200
20.5					0	7,800					0	6,000

NOTES:
A) FLY SECTION CAPACITIES ARE LIMITED BY ANGLE. DO NOT USE LOAD RADIUS WHEN USING FLY SECTION.
B) RATINGS ABOVE THE BOLD LINE ARE BASED ON THE MACHINE'S HYDRAULIC OR STRUCTURAL STRENGTH AND NOT STABILITY.
C) RATINGS BELOW THE BOLD LINE ARE BASED ON 85% OF TIPPING.
D) ALL CAPACITIES ARE IN POUNDS.
E) TELESCOPE CYLINDER MUST BE FULLY RETRACTED AND AGAINST STOPS.

WARNING
FOR BOOM LENGTHS LESS THAN 30' WITH FLY SECTION EXTENDED, THE RATED LOADS ARE DETERMINED BY BOOM ANGLE ONLY, IN THE COLUMN HEADED BY 30' BOOM. FOR BOOM ANGLES NOT SHOWN USE RATINGS OF THE NEXT LOWER BOOM ANGLE.

CAUTION!
DO NOT EXTEND OR RETRACT COUNTERWEIGHT WITH ANY LOAD SUSPENDED ON HOOK OR FORKS.

LOAD CHARTS FOR BASE UNIT WITH 1 COUNTERWEIGHT SLAB

33 TON MOBILIFT LOAD CHART

MLLC230
2/17/2009

FOR USE WITH HOOK BLOCK ONLY
STANDARD NON-REMOVABLE "A" COUNTERWEIGHT
PLUS (1) COUNTERWEIGHT PLATE

LOAD RADIUS (FEET FROM FRONT)	FULLY EXTENDED BOOM LENGTH (FEET) 15	15	22	22	30	30	FULLY RETRACTED BOOM LENGTH (FEET) 15	15	22	22	30	30
0	50	66,139	LOADED BOOM ANGLE		MANUAL FLY SECTION SEE NOTES		50	66,139	LOADED BOOM ANGLE		MANUAL FLY SECTION SEE NOTES	
1	45	66,139					45	66,139				
2	39	66,139	58	66,139			39	66,139	58	66,139		
3	33	66,139	55	66,139			33	54,500	55	53,400		
4	25	54,300	52	53,400	LOADED BOOM ANGLE		25	43,400	52	42,500	LOADED BOOM ANGLE	
5	14	45,000	48	44,200			14	35,900	48	35,100		
5.5	0	41,700					0	33,200				
6			45	37,600	59	38,600			45	29,800	59	30,800
7	SEE NOTE (E)		41	32,600	56	33,600	SEE NOTE (E)		41	25,700	56	26,700
8			37	28,700	54	29,600			37	22,600	54	23,500
9			32	25,600	52	26,400			32	20,100	52	20,900
10			27	23,000	49	23,800			27	18,000	49	18,800
11			21	20,900	47	21,700			21	16,300	47	17,000
12			18	19,100	44	19,800			12	14,800	44	15,500
12.5			0	18,300					0	14,200		
13					41	18,200					41	14,300
14					38	16,800					38	13,100
15					35	15,600					35	12,200
16					32	14,600					32	11,300
17					28	13,600					28	10,500
18					23	12,800					23	9,800
19					18	12,000					18	9,200
20					10	11,300					10	8,700
20.5					0	11,000					0	8,400

NOTES:
A) FLY SECTION CAPACITIES ARE LIMITED BY ANGLE. DO NOT USE LOAD RADIUS WHEN USING FLY SECTION.
B) RATINGS ABOVE THE BOLD LINE ARE BASED ON THE MACHINE'S HYDRAULIC OR STRUCTURAL STRENGTH AND NOT STABILITY.
C) RATINGS BELOW THE BOLD LINE ARE BASED ON 85% OF TIPPING.
D) ALL CAPACITIES ARE IN POUNDS.
E) TELESCOPE CYLINDER MUST BE FULLY RETRACTED AND AGAINST STOPS.

WARNING
FOR BOOM LENGTHS LESS THAN 30' WITH FLY SECTION EXTENDED, THE RATED LOADS ARE DETERMINED BY BOOM ANGLE ONLY, IN THE COLUMN HEADED BY 30' BOOM. FOR BOOM ANGLES NOT SHOWN USE RATINGS OF THE NEXT LOWER BOOM ANGLE.

CAUTION!
DO NOT EXTEND OR RETRACT COUNTERWEIGHT WITH ANY LOAD SUSPENDED ON HOOK OR FORKS.

NOTE:
Specifications are provided in metric dimensions. All equipment dimensions, designs, specifications, calculations, etc., as described, are subject to change at manufacturer's discretion at any time and without notice. Weights are approximate and may vary. Data herein is for informational purposes only and will not be construed to guarantee suitability of equipment for any particular as performance my vary with conditions encountered. Warranty will apply as written in standard contract form upon purchase of equipment. Capacities are for reference only and must not be used for any serial numbered machine. Serial numbered load charts may be obtained from Lift Systems, Inc.

View thousands of Crane Specifications on FreeCraneSpecs.com

MOBILIFT

33 TON

LOAD CHARTS FOR BASE UNIT WITH 2 COUNTERWEIGHT SLABS

33 TON MOBILIFT LOAD CHART

MLLC231
2/17/2009

FOR USE WITH HOOK BLOCK ONLY
STANDARD NON-REMOVABLE "A" COUNTERWEIGHT
PLUS (2) COUNTERWEIGHT PLATES

LOAD RADIUS (FEET FROM FRONT)	FULLY EXTENDED BOOM LENGTH (FEET) ∠° 15	22	LOADED BOOM ANGLE ∠°		30		FULLY RETRACTED BOOM LENGTH (FEET) ∠° 15	22	LOADED BOOM ANGLE ∠°		30	
0	50	66,139			MANUAL FLY SECTION SEE NOTES		50	66,139			MANUAL FLY SECTION SEE NOTES	
1	45	66,139					45	66,139				
2	39	66,139	58	66,139			39	66,139	58	66,139		
3	33	66,139	55	66,139			33	66,139	55	66,139		
4	25	66,139	52	66,139			25	53,500	52	52,600		
5	14	56,500	48	55,700			14	44,400	48	43,600		
5.5	0	52,300					0	41,100				
6	SEE NOTE (E)		45	47,500	59	48,500	SEE NOTE (E)		45	37,100	59	38,100
7			41	41,300	56	42,200			41	32,100	56	33,100
8			37	36,400	54	37,300			37	28,300	54	29,200
9			32	32,500	52	33,400			32	25,200	52	26,100
10			27	29,400	49	30,200			27	22,700	49	23,500
11			21	26,700	47	27,500			21	20,600	47	21,300
12			18	24,400	44	25,200			12	18,800	44	19,500
12.5			0	23,500					0	18,000		
13					41	23,200					41	18,000
14					38	21,500					38	16,600
15					35	20,000					35	15,400
16					32	18,700					32	14,400
17					28	17,500					28	13,400
18					23	16,500					23	12,600
19					18	15,500					18	11,800
20					10	14,700					10	11,100
20.5					0	14,300					0	10,800

NOTES:
A) FLY SECTION CAPACITIES ARE LIMITED BY ANGLE. DO NOT USE LOAD RADIUS WHEN USING FLY SECTION.
B) RATINGS ABOVE THE BOLD LINE ARE BASED ON THE MACHINE'S HYDRAULIC OR STRUCTURAL STRENGTH AND NOT STABILITY.
C) RATINGS BELOW THE BOLD LINE ARE BASED ON 85% OF TIPPING.
D) ALL CAPACITIES ARE IN POUNDS.
E) TELESCOPE CYLINDER MUST BE FULLY RETRACTED AND AGAINST STOPS.

WARNING
FOR BOOM LENGTHS LESS THAN 30' WITH FLY SECTION EXTENDED, THE RATED LOADS ARE DETERMINED BY BOOM ANGLE ONLY, IN THE COLUMN HEADED BY 30' BOOM. FOR BOOM ANGLES NOT SHOWN USE RATINGS OF THE NEXT LOWER BOOM ANGLE.

CAUTION!
DO NOT EXTEND OR RETRACT COUNTERWEIGHT WITH ANY LOAD SUSPENDED ON HOOK OR FORKS.

LOAD CHARTS FOR BASE UNIT WITH 3 COUNTERWEIGHT SLABS

33 TON MOBILIFT LOAD CHART

MLLC232
2/17/2009

FOR USE WITH HOOK BLOCK ONLY
STANDARD NON-REMOVABLE "A" COUNTERWEIGHT
PLUS (3) COUNTERWEIGHT PLATES

LOAD RADIUS (FEET FROM FRONT)	FULLY EXTENDED BOOM LENGTH (FEET) ∠° 15	22	LOADED BOOM ANGLE ∠°		30		FULLY RETRACTED BOOM LENGTH (FEET) ∠° 15	22	LOADED BOOM ANGLE ∠°		30	
0	50	66,139			MANUAL FLY SECTION SEE NOTES		50	66,139			MANUAL FLY SECTION SEE NOTES	
1	45	66,139					45	66,139				
2	39	66,139	58	66,139			39	66,139	58	66,139		
3	33	66,139	55	66,139			33	66,139	55	66,139		
4	25	66,139	52	66,139			25	64,000	52	63,300		
5	14	66,139	48	66,139			14	52,900	48	52,100		
5.5	0	63,300					0	49,000				
6	SEE NOTE (E)		45	57,300	59	58,300	SEE NOTE (E)		45	44,400	59	45,400
7			41	49,900	56	50,900			41	38,600	56	39,500
8			37	44,100	54	45,000			37	34,000	54	34,900
9			32	39,500	52	40,300			32	30,400	52	31,200
10			27	35,700	49	36,500			27	27,400	49	28,200
11			21	32,500	47	33,300			21	24,900	47	25,600
12			18	29,800	44	30,500			12	22,700	44	23,500
12.5			0	28,700					0	21,900		
13					41	28,200					41	21,600
14					38	26,200					38	20,000
15					35	24,400					35	18,600
16					32	22,800					32	17,400
17					28	21,400					28	16,300
18					23	20,200					23	15,300
19					18	19,000					18	14,400
20					10	18,000					10	13,600
20.5					0	17,600					0	13,300

NOTES:
A) FLY SECTION CAPACITIES ARE LIMITED BY ANGLE. DO NOT USE LOAD RADIUS WHEN USING FLY SECTION.
B) RATINGS ABOVE THE BOLD LINE ARE BASED ON THE MACHINE'S HYDRAULIC OR STRUCTURAL STRENGTH AND NOT STABILITY.
C) RATINGS BELOW THE BOLD LINE ARE BASED ON 85% OF TIPPING.
D) ALL CAPACITIES ARE IN POUNDS.
E) TELESCOPE CYLINDER MUST BE FULLY RETRACTED AND AGAINST STOPS.

WARNING
FOR BOOM LENGTHS LESS THAN 30' WITH FLY SECTION EXTENDED, THE RATED LOADS ARE DETERMINED BY BOOM ANGLE ONLY, IN THE COLUMN HEADED BY 30' BOOM. FOR BOOM ANGLES NOT SHOWN USE RATINGS OF THE NEXT LOWER BOOM ANGLE.

CAUTION!
DO NOT EXTEND OR RETRACT COUNTERWEIGHT WITH ANY LOAD SUSPENDED ON HOOK OR FORKS.

NOTE:
Specifications are provided in metric dimensions. All equipment dimensions, designs, specifications, calculations, etc., as described, are subject to change at manufacturer's discretion at any time and without notice. Weights are approximate and may vary. Data herein is for informational purposes only and will not be construed to guarantee suitability of equipment for any particular as performance my vary with conditions encountered. Warranty will apply as written in standard contract form upon purchase of equipment. Capacities are for reference only and must not be used for any serial numbered machine. Serial numbered load charts may be obtained from Lift Systems, Inc.

View thousands of Crane Specifications on FreeCraneSpecs.com

MOBILIFT

33 TON

LOAD CHARTS FOR BASE UNIT WITH FULL COUNTERWEIGHT (4 SLABS)

33 TON MOBILIFT LOAD CHART

MLLC233
2/17/2009

FOR USE WITH HOOK BLOCK ONLY
STANDARD NON-REMOVABLE "A" COUNTERWEIGHT
PLUS (4) COUNTERWEIGHT PLATES

LOAD RADIUS (FEET FROM FRONT)	FULLY EXTENDED BOOM LENGTH (FEET)						FULLY RETRACTED BOOM LENGTH (FEET)					
	∠°	15	LOADED BOOM ANGLE ∠°	22		30	∠°	15	LOADED BOOM ANGLE ∠°	22		30
0	50	66,139			MANUAL FLY SECTION SEE NOTES		50	66,139			MANUAL FLY SECTION SEE NOTES	
1	45	66,139					45	66,139				
2	39	66,139	58	66,139			39	66,139	58	66,139		
3	33	66,139	55	66,139			33	66,139	55	66,139		
4	25	66,139	52	66,139			25	66,139	52	66,139		
5	14	66,139	48	66,139			14	61,700	48	61,100		
5.5	0	66,139					0	57,200				
6	SEE NOTE (E)		45	66,139	59	61,000	SEE NOTE (E)		45	51,700	59	52,700
7			41	58,600	56	58,600			41	45,000	56	45,900
8			37	51,900	54	52,700			37	39,700	54	40,600
9			32	46,500	52	47,300			32	35,500	52	36,300
10			27	42,000	49	42,800			27	32,000	49	32,900
11			21	38,300	47	39,100			21	29,200	47	29,900
12			18	35,200	44	35,900			12	26,700	44	27,500
12.5			0	33,900					0	25,700		
13					41	33,200					41	25,300
14					38	30,800					38	23,500
15					35	28,800					35	21,900
16					32	26,900					32	20,400
17					28	25,300					28	19,200
18					23	23,800					23	18,000
19					18	22,500					18	17,000
20					10	21,300					10	16,100
20.5					0	20,800					0	15,700

NOTES:
A) FLY SECTION CAPACITIES ARE LIMITED BY ANGLE. DO NOT USE LOAD RADIUS WHEN USING FLY SECTION.
B) RATINGS ABOVE THE BOLD LINE ARE BASED ON THE MACHINE'S HYDRAULIC OR STRUCTURAL STRENGTH AND NOT STABILITY.
C) RATINGS BELOW THE BOLD LINE ARE BASED ON 85% OF TIPPING.
D) ALL CAPACITIES ARE IN POUNDS.
E) TELESCOPE CYLINDER MUST BE FULLY RETRACTED AND AGAINST STOPS.

WARNING
FOR BOOM LENGTHS LESS THAN 30' WITH FLY SECTION EXTENDED, THE RATED LOADS ARE DETERMINED BY BOOM ANGLE ONLY, IN THE COLUMN HEADED BY 30' BOOM. FOR BOOM ANGLES NOT SHOWN USE RATINGS OF THE NEXT LOWER BOOM ANGLE.

CAUTION!
DO NOT EXTEND OR RETRACT COUNTERWEIGHT WITH ANY LOAD SUSPENDED ON HOOK OR FORKS.

LOAD CHARTS FOR POWER BOOM PICKING EYE + FULL COUNTERWEIGHT (4 SLABS)

33 TON MOBILIFT LOAD CHART

MLLC238
2/17/2009

FOR USE WITH POWER BOOM LIFT EYE ONLY
STANDARD NON-REMOVABLE "A" COUNTERWEIGHT
PLUS (4) COUNTERWEIGHT PLATES

LOAD RADIUS (FEET FROM FRONT)	FULLY EXTENDED				FULLY RETRACTED			
	∠°	POWER BOOM RETRACTED	∠°	POWER BOOM EXTENDED	∠°	POWER BOOM RETRACTED	∠°	POWER BOOM EXTENDED
0	41	66,139			41	66,139		
1	33	66,139	57	66,139	33	66,139	57	66,139
2	25	66,139	54	66,139	25	66,139	54	66,139
3	11	66,139	50	66,139	11	66,139	50	66,139
3.3	0	66,139			0	66,139		
4	SEE NOTE (D)		46	66,139	SEE NOTE (D)		46	66,139
5			42	66,139			42	59,720
6			38	65,700			38	50,900
7			33	57,900			33	44,200
8			27	51,200			27	39,000
9			20	45,800			20	34,900
10			10	41,400			10	31,500
10.3			0	40,200			0	30,500

NOTES:

A) RATINGS ABOVE THE BOLD LINE ARE BASED ON THE MACHINE'S HYDRAULIC OR STRUCTURAL STRENGTH AND NOT STABILITY.
B) RATINGS BELOW THE BOLD LINE ARE BASED ON 85% OF TIPPING.

C) ALL CAPACITIES ARE IN POUNDS.

D) TELESCOPE CYLINDER MUST BE FULLY RETRACTED AND AGAINST STOPS.

CAUTION!
DO NOT EXTEND OR RETRACT COUNTERWEIGHT WITH ANY LOAD SUSPENDED ON HOOK OR FORKS.

LIFT SYSTEMS, INC.

OFFICE:
1505 - 7th Street
East Moline, IL 61244

MAILING ADDRESS:
P.O. Box 906
Moline, IL 61266

TEL: +1-309-764-9842
FAX: +1-309-764-9848
EMAIL: liftit@lift-systems.com
WEB: www.lift-systems.com