View thousands of Crane Specifications on FreeCraneSpecs.com

Mobile Crane
Grue mobile

LTM 1200-5.1

Technical Data
Caractéristiques techniques

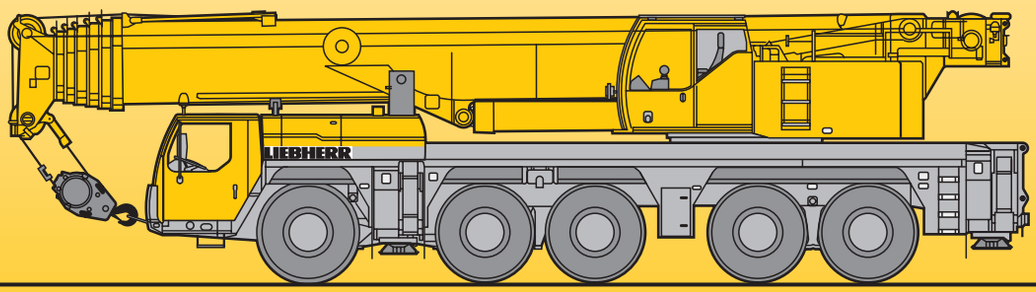

LIEBHERR

View thousands of Crane Specifications on FreeCraneSpecs.com

Lifting capacities on telescopic boom
Forces de levage à la flèche télescopique

43 – 236 ft | 360° | 159000 lbs | 85%

ft	43 ft *	43 ft	58 ft	73 ft	88 ft	103 ft	117 ft	132 ft	147 ft	162 ft	177 ft	191 ft	206 ft	221 ft	236 ft	ft
8		332														8
10	470	331	295													10
12	328	315	295	295	259											12
14	303	288	286	282	256	207										14
16	271	265	261	253	243	205	170									16
18	250	245	242	234	227	202	169									18
20	232	227	226	217	214	198	168	127	97							20
24	202	198	199	191	188	183	162	126	96							24
28	174	173	176	170	168	163	155	120	91.5	73.5						28
32	143	143	157	153	151	147	145	115	86	71.5	59.2					32
36			140	139	137	133	132	110	79.5	67.5	57.5	46.7				36
40			125	127	125	122	121	104	74.5	63.5	54.8	45.2	37.7	30.6	25.7	40
47				106	105	105	105	95.5	65.5	57.1	49.9	42.1	35.8	30.4	25.4	47
54				88.5	88.5	90	88.5	86.5	58.8	51.3	45.4	39	33.6	28.9	24	54
61					76	77	76.5	77	52.5	46.6	41.2	36.1	31.5	27.4	22.6	61
68					67.5	67	68	67	47.4	42.2	37.7	33.4	29.4	25.9	21.4	68
75					54.3	58.5	60	58.6	42.9	38.4	34.3	30.9	27.5	24.5	20	75
82						52.1	53.3	51.7	39.1	35.1	31.4	28.5	25.8	23.1	18.5	82
89						43.9	47.5	45.8	36.4	32.1	28.9	26.3	24.2	21.7	17.2	89
96							42.6	40.9	34.3	29.5	26.5	24.5	22.6	20.3	15.9	96
103							36.1	36.6	32.6	27	24.6	22.7	21	19	14.7	103
110								33.1	31	24.9	22.9	21	19.4	17.9	13.5	110
117								29.1	29.6	23.2	21.2	19.5	17.9	16.8	12.5	117
124									28.5	21.9	19.6	17.9	16.7	15.7	11.6	124
131									26.2	21	18	16.5	15.5	14.7	10.7	131
138										20.2	16.5	15.4	14.4	13.8	9.9	138
145										19.1	15.3	14.3	13.4	13	9.2	145
152											14.5	13.3	12.6	12.2	8.6	152
159												12.5	11.9	11.5	7.9	159
166												11.8	11.1	10.8	7.2	166
173													10.5	10.2	6.7	173
180													10	9.6	6.2	180
187													9.6	9.1	5.6	187
194														8.6	5.2	194
201														8.2	4.8	201
208															4.4	208
215															4	215

* over rear / en arrière

TAB 1555401 / 1555408

View thousands of Crane Specifications on FreeCraneSpecs.com

Lifting capacities on telescopic boom
Forces de levage à la flèche télescopique

43 – 236 ft | 360° | 115000 lbs | 85%

ft	43 ft	58 ft	73 ft	88 ft	103 ft	117 ft	132 ft	147 ft	162 ft	177 ft	191 ft	206 ft	221 ft	236 ft	ft
8	332														8
10	331	295													10
12	314	295	295	259											12
14	287	285	282	256	207										14
16	263	261	253	243	205	170									16
18	243	242	234	227	202	169									18
20	225	225	217	214	198	168	127	97							20
24	195	196	191	188	183	162	126	96							24
28	170	172	170	168	163	155	120	91.5	73.5						28
32	143	150	150	149	143	138	115	86	71.5	59.2					32
36		131	131	128	125	119	110	79.5	67.5	57.5	46.7				36
40		115	116	112	110	104	103	74.5	63.5	54.8	45.2	37.7	30.6	25.7	40
47			94	94	89	89	84	65.5	57.1	49.9	42.1	35.8	30.4	25.4	47
54			78.5	78	75.5	74.5	70	58.8	51.3	45.4	39	33.6	28.9	24	54
61				66	67	63.5	59.8	52.5	46.6	41.2	36.1	31.5	27.4	22.6	61
68				56.1	57.7	55	51.6	47.4	42.2	37.7	33.4	29.4	25.9	21.4	68
75				48.3	49.8	48.2	45.1	42.5	38.4	34.3	30.9	27.5	24.5	20	75
82					43.5	42.4	39.7	38.7	35.1	31.4	28.5	25.8	23.1	18.5	82
89					38.3	37.2	35.2	35.8	31.6	28.9	26.3	24.2	21.7	17.2	89
96						32.9	31.1	32.4	28.6	26.5	24.5	22.6	20.3	15.9	96
103						29.3	27.4	29.1	26.3	24.3	22.7	21	19	14.7	103
110							24.2	25.9	24.5	21.8	21	19.4	17.9	13.5	110
117							21.5	23.1	23.2	19.8	19.5	17.9	16.8	12.5	117
124								20.7	21.5	18.5	17.6	16.7	15.7	11.6	124
131								19.7	19.3	16.9	15.7	15.5	14.7	10.7	131
138									17.4	15.7	14.8	14.4	13.8	9.9	138
145									15.7	15.1	13.9	13	13	9.2	145
152										14.4	12.8	12.2	12.1	8.6	152
159											11.4	11.6	11	7.9	159
166											10.2	10.9	9.8	7.2	166
173												9.8	8.6	6.7	173
180												8.8	7.5	6.2	180
187												7.8	6.6	5.6	187
194													5.7	5.2	194
201													4.9	4.8	201
208														4.2	208
215														3.5	215

TAB 1555409

View thousands of Crane Specifications on FreeCraneSpecs.com

Lifting capacities on telescopic boom
Forces de levage à la flèche télescopique

43 – 236 ft | 360° | 93000 lbs | 85%

ft	43 ft	58 ft	73 ft	88 ft	103 ft	117 ft	132 ft	147 ft	162 ft	177 ft	191 ft	206 ft	221 ft	236 ft	ft
8	332														8
10	331	295													10
12	313	295	295	259											12
14	285	285	282	256	207										14
16	261	260	253	243	205	170									16
18	241	241	234	227	202	169									18
20	223	224	217	214	198	168	127	97							20
24	192	193	190	187	179	161	126	96							24
28	164	166	165	158	150	143	120	91.5	73.5						28
32	140	142	139	131	128	120	115	86	71.5	59.2					32
36		122	118	115	109	107	101	79.5	67.5	57.5	46.7				36
40		108	102	101	95.5	94.5	89	74.5	63.5	54.8	45.2	37.7	30.6	25.7	40
47			84.5	81	81	77	72.5	65.5	57.1	49.9	42.1	35.8	30.4	25.4	47
54			68.5	68	67.5	64	60	57.1	51.3	45.4	39	33.6	28.9	24	54
61				59.2	57.5	54.4	50.9	48.9	46.1	41.2	36.1	31.5	27.4	22.6	61
68				50.1	49.5	46.9	43.6	43.9	40.1	37.6	33.4	29.4	25.9	21.4	68
75				43.1	42.7	40.8	37.7	38.8	35.3	33.5	30.9	27.5	24.5	20	75
82					37.1	35.8	32.8	33.9	31.3	29.4	28.4	25.8	23.1	18.5	82
89					32.5	31.9	28.8	29.9	28.7	26.6	25.4	24.2	21.7	17.2	89
96						29.5	25.3	26.5	26.6	23.8	22.6	22.3	20.3	15.9	96
103						26.8	22.7	24.3	24	21.3	20.6	19.9	19	14.7	103
110							21.2	22.8	21.5	19.7	19.1	17.8	17.9	13.5	110
117							19.9	20.8	19.1	18.4	17.1	16.5	16.1	12.5	117
124								18.7	16.9	17	15.3	15.5	14.2	11.6	124
131								16.8	15.6	15.4	13.7	14.2	12.6	10.7	131
138									14.8	13.8	12.9	12.7	11.2	9.9	138
145									13.8	12.6	12.1	11.4	9.9	9.2	145
152										12	11	10.1	8.7	8.5	152
159											9.8	8.9	7.6	7.6	159
166											8.6	7.7	6.5	6.7	166
173												6.7	5.5	5.8	173
180												5.8	4.5	4.8	180
187												5	3.7	3.9	187
194													2.9	3.1	194

TAB 1555410

View thousands of Crane Specifications on FreeCraneSpecs.com

Lifting capacities on telescopic boom
Forces de levage à la flèche télescopique

43 – 236 ft | 360° | 71000 lbs | 85%

ft	43 ft	58 ft	73 ft	88 ft	103 ft	117 ft	132 ft	147 ft	162 ft	177 ft	191 ft	206 ft	221 ft	236 ft	ft
8	332														8
10	331	295													10
12	311	295	294	259											12
14	283	284	281	256	207										14
16	259	260	253	243	205	170									16
18	239	240	234	227	202	169									18
20	220	222	217	212	197	167	127	97							20
24	186	187	181	169	161	149	126	96							24
28	155	155	145	139	131	125	116	91.5	73.5						28
32	130	128	122	116	111	107	100	86	71.5	59.2					32
36		108	104	98.5	97.5	92	86	79.5	67.5	57.5	46.7				36
40		92.5	89.5	87	85	80.5	75.5	71	63.5	54.8	45.2	37.7	30.6	25.7	40
47			72	71.5	68.5	65	60.5	57.8	55.2	49.8	42.1	35.8	30.4	25.4	47
54			59.4	59.3	56.8	53.5	49.7	50.5	46.2	44	39	33.6	28.9	24	54
61				49.7	47.8	44.9	41.5	42.5	39.4	37.2	35.6	31.5	27.4	22.6	61
68				41.8	40.8	39.1	35.1	36.2	34.7	32.8	31.2	29.4	25.9	21.4	68
75				35.6	35.1	35.6	30.2	31.6	31.4	28.2	27.8	26.5	24.5	20	75
82					30.1	31.6	27.3	28.9	27.3	25.3	24.7	23.5	22.7	18.5	82
89					26	27.7	25.5	26.2	23.9	23.5	21.9	21.6	20.2	17.2	89
96						24.2	24	23.2	21.3	21	20	19.3	17.5	15.9	96
103						21.3	21.9	20.6	19.6	18.6	18.1	16.9	15.2	14.7	103
110							19.5	18.1	18.1	17.1	16.1	14.8	13.2	13.1	110
117							17.3	16.2	16.1	15.5	14.3	13	11.4	11.4	117
124								15.1	14.3	13.8	12.7	11.4	9.9	9.9	124
131								13.8	12.9	12.3	11.2	10	8.5	8.6	131
138									11.6	11	9.9	8.7	7.2	7.3	138
145									10.2	9.6	8.6	7.6	6.1	6.2	145
152										8.5	7.4	6.5	5.1	5.2	152
159											6.3	5.5	4.1	4.2	159
166											5.4	4.5		3.4	166
173												3.6			173
180												2.8			180

TAB 1555411

View thousands of Crane Specifications on FreeCraneSpecs.com

Lifting capacities on telescopic boom
Forces de levage à la flèche télescopique

43 – 236 ft | 360° | 26000 lbs | 85%

ft	43 ft	58 ft	73 ft	88 ft	103 ft	117 ft	132 ft	147 ft	162 ft	177 ft	191 ft	206 ft	221 ft	236 ft	ft
8	332														8
10	331	295													10
12	307	294	290	259											12
14	279	279	278	248	207										14
16	254	255	236	210	191	167									16
18	225	219	200	179	165	152									18
20	196	182	168	154	141	134	101	93.5							20
24	142	135	127	119	114	105	96	88.5							24
28	109	105	101	97	91	84	77	73.5	64.5						28
32	86	84.5	83	79	74.5	70	63.5	63	58.4	53.9					32
36		70	68.5	66	62.5	61.5	53.1	53.4	50.7	47.4	44.2				36
40		59	58.5	56.4	53.5	53.7	45.9	46.7	45.5	42.1	40.3	37.3	30.6	25.7	40
47			45.5	44.3	41.8	42.5	40.9	39.3	36.4	35.7	33	31.8	29.7	25.4	47
54			36.7	37.2	33.8	35.1	34.4	32.3	31.6	30.1	28.1	26.2	23.9	23.1	54
61				31	29.1	30.2	28.6	28.1	26.5	25	23.1	21.4	19.4	18.9	61
68				25.8	25.7	25.4	24.3	23.6	22.2	20.9	19.2	17.6	15.7	15.4	68
75				21.4	21.7	21.7	20.6	20.1	18.7	17.5	15.9	14.5	12.7	12.6	75
82					18.1	18.5	17.6	17.2	15.9	14.8	13.3	11.9	10.2	10.3	82
89					15.3	15.8	15.2	14.7	13.5	12.5	11	9.7	8.1	8.2	89
96						13.5	13	12.7	11.5	10.5	9.1	7.9	6.3	6.4	96
103						11.5	11.1	10.9	9.8	8.8	7.5	6.3		4.9	103
110							9.4	9.3	8.3	7.3	6	4.8			110
117							7.9	7.8	7	6.1	4.8				117
124								6.5	5.7	5					124
131								5.4	4.6	4					131

TAB 1555413

43 – 236 ft | 360° | 0 lbs | 85%

ft	43 ft	58 ft	73 ft	88 ft	103 ft	117 ft	132 ft	147 ft	162 ft	177 ft	191 ft	206 ft	221 ft	236 ft	ft
8	332														8
10	330	295													10
12	304	293	246	214											12
14	274	258	222	196	159										14
16	225	201	178	159	146	127									16
18	179	164	149	135	125	112									18
20	141	132	122	114	104	95	67.5	66							20
24	96.5	95	90.5	84.5	78	75	64	63.5							24
28	70.5	71	69.5	66.5	61	60.5	55.4	53.4	46.7						28
32	54.1	55.5	55.4	54.8	49.6	50.8	48	45.5	42.9	38.9					32
36		44.6	45.2	45.5	44.2	43	40.7	39	36.5	34	31.2				36
40		36.9	37.8	38.5	37.7	36.7	34.8	33.5	31.3	29.2	26.8	24.6	17.1	16.6	40
47			28.4	29.4	29	28.5	27.1	26.1	24.3	22.6	20.6	18.7	16.4	16	47
54			21.8	23	22.9	22.6	21.4	20.7	19.2	17.7	15.9	14.2	12.2	12.1	54
61				18.4	18.3	18.2	17.2	16.6	15.2	14	12.3	10.8	8.9	9	61
68				14.7	14.8	14.8	13.8	13.4	12.1	11	9.5	8.1			68
75				11.6	12	12	11.2	10.8	9.6	8.6	7.1				75
82					9.6	9.8	9	8.7	7.6	6.6					82
89					7.5	8	7.2	6.9	5.8						89
96						6.3	5.7	5.4							96
103						4.8									103

TAB 1555414

View thousands of Crane Specifications on FreeCraneSpecs.com

Lifting heights
Hauteurs de levage

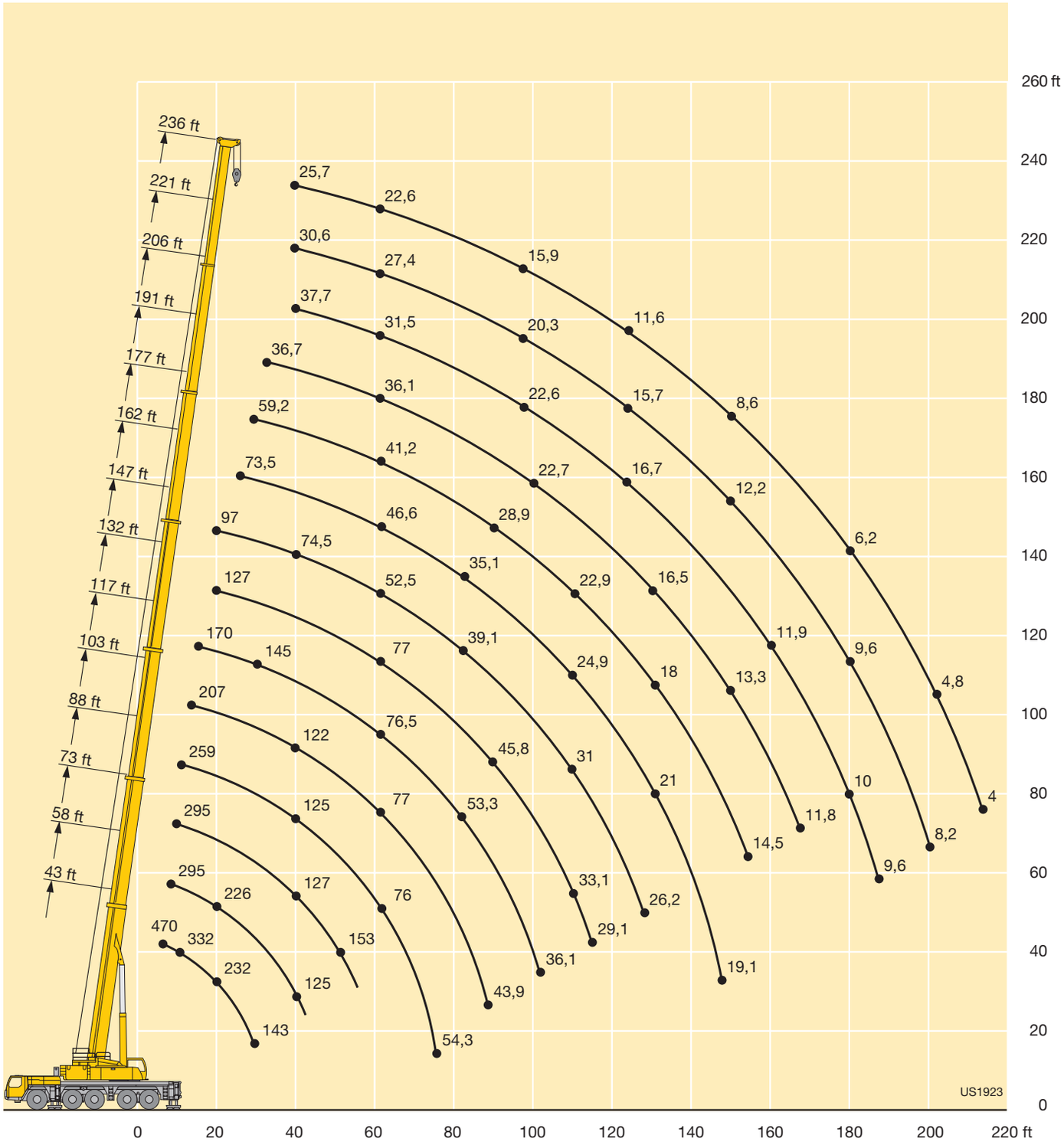

View thousands of Crane Specifications on FreeCraneSpecs.com

Lifting capacities on the hydraulically or mechanically variable folding jib
Forces de levage à la fléchette pliante à variation hydraulique ou mécanique

43 – 236 ft | 18 ft | 360° | 159000 lbs | 85%

ft	43 ft			88 ft			103 ft			132 ft			147 ft			162 ft			ft
	18 ft			18 ft			18 ft			18 ft			18 ft			18 ft			
	0°	22.5°	45°	0°	22.5°	45°	0°	22.5°	45°	0°	22.5°	45°	0°	22.5°	45°	0°	22.5°	45°	
10	134	115																	10
12	134	110	89	134															12
14	134	106	87.5	134															14
16	131	101	85	134			100												16
18	125	97	82	134	101		96.5												18
20	119	92.5	79	132	101	79.5	92	71.5		87.5									20
24	106	85	74.5	126	95.5	79	84	70	59.3	86			77						24
28	95	78	70.5	119	90.5	76	77.5	65.5	57.9	81	66		75.5						28
32	86	72.5	67	111	86	73.5	71.5	61.5	54.8	76	64	56	72.5	62		59.7			32
36	78	68	64.5	103	82	71	66.5	57.8	52.2	71.5	60.5	54.1	69	59.7	53.6	57.8	56.8		36
40	72	61	58.8	95	78.5	69.5	62.5	54.6	49.8	67.5	57.6	52	65.5	57.2	51.6	55	54.2	50.1	40
47	63			83.5	73.5	66	55.9	50	46.2	61.5	53.4	48.6	58.7	53.1	48.6	49.8	49.3	47.2	47
54				74	68.5	63.5	50.7	45.9	43	56.7	49.7	45.7	52.3	49.7	45.9	45.1	44.6	44.1	54
61				66.5	64	61.5	46.2	42.6	40.5	52.2	46.4	43.3	47.3	46	43.4	40.8	40.5	40.4	61
68				59.6	58.8	58.5	42.7	39.7	38.2	48.5	43.6	41.1	42.5	42.1	40.8	37.2	36.8	36.8	68
75				54.2	53.8	41.9	39.5	37.2	36.3	45.1	41.2	39.2	38.5	38.4	38.1	33.8	33.6	33.7	75
82				49.5	49.3	21.3	36.8	35.1	34.6	42.3	39	37.5	34.9	35.1	35.2	30.8	30.7	30.7	82
89				44.7	33.8	14.4	34.5	33.3	27.9	39.9	37.1	36.1	31.8	32	32.1	28.3	28.2	28.2	89
96							32.5	31.9	20	37.7	35.4	34.7	29.2	29.4	29.4	25.8	25.9	26	96
103							31	25.7	13.4	35.1	34	33.7	26.7	27	27.1	23.7	23.8	23.9	103
110							23.6			32	32.1	32.1	24.5	24.8	24.9	21.8	21.9	22	110
117										29	29.3	24.6	22.6	22.9	23	19.9	20.1	20.2	117
124										26.3	26.5	17.6	20.8	21	21.1	18.4	18.4	18.5	124
131										23.4	23.6	12	19.2	19.4	19.4	16.9	17	17.1	131
138													17.8	18	16.8	15.5	15.6	15.6	138
145													16.4	16.5	12	14.3	14.3	14.4	145
152																13.2	13.3	13.3	152
159																12.2	11.8	11.7	159
166																10.2			166

TAB 1555043 / 1555092 / 1555141

43 – 236 ft | 18 ft | 360° | 159000 lbs | 85%

ft	177 ft			191 ft			206 ft			221 ft			236 ft			ft
	18 ft			18 ft			18 ft			18 ft			18 ft			
	0°	22.5°	45°	0°	22.5°	45°	0°	22.5°	45°	0°	22.5°	45°	0°	22.5°	45°	
36	46.7															36
40	45.3	44.7	41.5	37.2	34.7		29.3	24.6		22						40
47	42.1	41.2	41	35.2	34.4	32.1	29	24.5	27.2	21.9	20.9		17.3			47
54	38.7	38	37.7	32.7	32	31.7	27.5	27	26.8	21	20.7	19.7	17.2	16.5	16.3	54
61	35.6	35	34.7	30.4	29.9	29.7	25.9	25.4	25.2	20	19.6	19.4	16.5	16.3	16.1	61
68	32.6	32.3	32.1	28.2	27.9	27.8	24.2	23.8	23.4	19	18.6	18.4	15.7	15.5	15.4	68
75	30	29.8	29.7	26.2	26	26	22.5	22.2	21.8	18	17.5	17.5	14.9	14.7	14.7	75
82	27.4	27.5	27.5	24.5	24.1	24.2	20.9	20.6	20.5	16.9	16.6	16.5	14.1	14	14.1	82
89	25.1	25.2	25.3	22.8	22.4	22.5	19.6	19.2	19.2	16	15.7	15.7	13.4	13.3	13.4	89
96	23.1	23.2	23.3	21.1	20.7	20.8	18.2	18	18	15.1	14.9	14.9	12.6	12.7	12.7	96
103	21.1	21.2	21.4	19.4	19.1	19.2	16.9	16.8	16.9	14.3	14.2	14.2	11.8	11.9	12	103
110	19.4	19.4	19.5	17.7	17.6	17.7	15.7	15.7	15.8	13.5	13.4	13.5	10.9	11.1	11.2	110
117	17.9	17.9	18	16.1	16.2	16.3	14.7	14.7	14.8	12.8	12.7	12.7	10.1	10.3	10.4	117
124	16.4	16.5	16.6	14.9	14.9	15	13.5	13.7	13.7	12.1	12.1	12.1	9.3	9.5	9.6	124
131	15	15.1	15.2	13.8	13.8	13.9	12.6	12.6	12.8	11.5	11.5	11.5	8.6	8.7	8.9	131
138	14	14	14.1	12.6	12.8	12.8	11.8	11.8	11.9	10.9	10.9	10.9	7.9	8.1	8.2	138
145	12.9	13	13	11.6	11.7	11.8	10.9	11	11.1	10.3	10.3	10.4	7.2	7.4	7.5	145
152	11.9	12	12	10.9	11	11	10.1	10.2	10.3	9.7	9.7	9.8	6.5	6.7	6.8	152
159	11	11.1	11.1	10.1	10.2	10.2	9.4	9.5	9.6	9.1	9.1	9.2	5.9	6.1	6.1	159
166	10.3	10.3	10.3	9.4	9.5	9.5	8.8	8.9	8.9	8.5	8.6	8.6	5.3	5.4	5.5	166
173	9.5	9.6	8.9	8.7	8.8	8.8	8.2	8.3	8.3	7.9	8	8	4.7	4.8	4.9	173
180				8.1	8.2	8.2	7.6	7.6	7.7	7.4	7.5	7.5	4.1	4.2	4.3	180
187				7.5	7.6	7.6	7	7.1	7.1	6.9	7	7	3.6	3.7	3.7	187
194							6.6	6.6	6.6	6.4	6.5	6.5	3.1	3.2	3.2	194
201							6.2	6.2	6.2	6	6	6	2.6	2.7	2.6	201
208										5.5	5.6	5.6				208
215										5.1	5.2	5.1				215
222										4.8						222

TAB 1555043 / 1555092 / 1555141

View thousands of Crane Specifications on FreeCraneSpecs.com

Lifting capacities on the hydraulically or mechanically variable folding jib
Forces de levage à la fléchette pliante à variation hydraulique ou mécanique

43 – 221 ft | 40 ft | 360° | 159000 lbs | 85%

↔ ft	43 ft			88 ft			103 ft			132 ft			147 ft			162 ft			↔ ft
	40 ft			40 ft			40 ft			40 ft			40 ft			40 ft			
	0°	22.5°	45°	0°	22.5°	45°	0°	22.5°	45°	0°	22.5°	45°	0°	22.5°	45°	0°	22.5°	45°	
10	46.1																		10
12	46.1			46.1															12
14	46.1			46.1															14
16	46.1			46.1			46.1												16
18	46.1	38.9		46.1			46.1												18
20	46.1	38.6		46.1			46.1			46.1									20
24	46.1	35.2		46.1	37.4		46.1			46.1			46.1						24
28	46.1	32.3		46.1	36.3		46.1			46.1			46.1			43.3			28
32	44.2	30	25.2	46.1	34.3		46.1	33.2		46.1			46.1			43.1			32
36	39.4	28	23.8	46.1	32.4		46.1	31.9		46.1	32.7		46.1			42.7			36
40	35.9	26.2	22.8	46.1	30.8	24.5	45.8	30.5	23.3	46.1	31.4		45.9	29.7		42.1	29.2		40
47	30.3	23.7	21.3	45.3	28.5	23.3	42.3	28.4	23.1	45.2	29.5	23.4	44.2	29.4	22.8	40.5	29		47
54	26.4	21.4	20.3	40.1	26.5	22.2	37.7	26.6	22.2	41.2	27.8	22.6	40.8	27.9	22.6	38.6	27.6	21.9	54
61	23	19.7	19.8	35.5	24.7	21.4	34.1	25.1	21.4	37.9	26.4	21.9	37.7	26.6	21.9	35.8	26.3	21.8	61
68	20.3	18.5		32	23.1	20.7	31	23.7	20.8	34.7	25.2	21.3	35.2	25.3	21.4	33.1	25.2	21.2	68
75				29	21.7	20.2	28.5	22.3	20.3	32.1	24	20.8	32.7	24.2	20.9	30.6	24.2	20.8	75
82				26.5	20.6	19.8	26.4	21.1	19.9	29.9	22.9	20.3	30.5	23	20.4	28.1	23.2	20.4	82
89				24.5	19.6	19.6	24.5	20.2	19.5	27.8	21.9	20	28.7	22	20.1	25.9	22.2	20	89
96				22.6	18.9	19.6	22.8	19.4	19.2	26.2	20.9	19.7	27	21.2	19.8	24.1	21.3	19.7	96
103				20.9	18.3	19.6	21.2	18.7	18.8	24.7	20.1	19.4	25.3	20.5	19.5	22.4	20.4	19.4	103
110				19.3	17.9	19.6	19.8	18	18.3	23.3	19.5	19	23.6	19.8	19.3	20.7	19.5	18.9	110
117				18.1	17.9		18.6	17.4	18	22	18.8	18.7	22	19.3	19	19.2	18.6	18.3	117
124							17.6	16.8	18	20.8	18.3	18.3	20.4	18.8	18.5	17.7	17.4	17.6	124
131							16.8	16.7		19.6	17.8	18	18.9	18.1	18.1	16.1	16.2	16.5	131
138										18.7	17.3	17.7	17.4	17.1	17.2	14.9	15.1	15.4	138
145										17.9	16.9	17.7	16	16	16.2	13.9	14	14.3	145
152										17	16.5		14.9	15	15.3	12.9	13.1	13.4	152
159										13.8			13.9	14.1	14.2	11.9	12.2	12.5	159
166													13	13.2	12.4	11.2	11.4	11.6	166
173													10.9			10.5	10.6	10.8	173
180																9.8	9.9		180

TAB 1555050 / 1555099 / 1555148

43 – 221 ft | 40 ft | 360° | 159000 lbs | 85%

↔ ft	177 ft			191 ft			206 ft			221 ft			↔ ft
	40 ft			40 ft			40 ft			40 ft			
	0°	22.5°	45°	0°	22.5°	45°	0°	22.5°	45°	0°	22.5°	45°	
36	35.6												36
40	35.1			28.9			21.6			17.4			40
47	33.9	26.9		28.3			21.5			17.3			47
54	32.4	26.7		27.3	23.6		20.9	19.1		16.8			54
61	30.6	25.6	21.1	25.9	23.2	20.5	19.9	18.8		16.2	15		61
68	28.6	24.6	20.9	24.4	21.9	20.4	18.9	17.9	16.7	15.5	14.8		68
75	26.6	23.6	20.5	22.7	20.6	19.8	17.9	16.9	16.4	14.8	14.1	13.4	75
82	24.8	22.5	20.1	21.1	19.5	18.9	16.9	16.1	15.6	14.1	13.5	13.1	82
89	23.1	21.4	19.8	19.7	18.3	18	16	15.3	14.9	13.5	12.9	12.7	89
96	21.4	20.3	19.3	18.4	17.3	17	15.1	14.6	14.3	12.8	12.4	12.2	96
103	19.8	19.2	18.5	17	16.4	16.2	14.3	13.9	13.7	12.3	11.8	11.7	103
110	18.2	18	17.7	15.9	15.4	15.4	13.5	13.2	13.2	11.7	11.3	11.2	110
117	16.6	16.8	16.8	14.8	14.5	14.6	12.8	12.6	12.6	11.2	10.9	10.8	117
124	15.3	15.5	15.7	13.7	13.7	13.8	12.1	11.9	12	10.6	10.4	10.4	124
131	14.2	14.4	14.6	12.6	12.9	13.1	11.4	11.4	11.4	10.1	10	10	131
138	13.2	13.4	13.7	11.8	12.1	12.4	10.7	10.8	10.9	9.6	9.5	9.6	138
145	12.1	12.5	12.8	11	11.4	11.6	10.1	10.2	10.4	9.2	9.1	9.2	145
152	11.3	11.6	11.9	10.3	10.7	10.9	9.5	9.7	9.9	8.7	8.7	8.8	152
159	10.6	10.8	11.1	9.5	9.9	10.2	8.9	9.1	9.3	8.2	8.3	8.4	159
166	9.9	10.1	10.4	8.9	9.2	9.4	8.4	8.6	8.8	7.8	7.9	8	166
173	9.2	9.4	9.7	8.3	8.6	8.8	7.8	8	8.2	7.3	7.5	7.6	173
180	8.6	8.8	9	7.7	8.1	8.2	7.3	7.5	7.7	6.9	7.1	7.2	180
187	8	8.2	8.3	7.2	7.5	7.6	6.8	7	7.1	6.5	6.7	6.8	187
194	7.5	7.6		6.7	7	7	6.3	6.5	6.6	6	6.2	6.4	194
201				6.3	6.5	6.5	5.8	6	6.1	5.6	5.8	5.9	201
208				5.8	6	6	5.4	5.6	5.6	5.2	5.4	5.5	208
215							5.1	5.2	5.2	4.8	5	5	215
222							4.7	4.8	4.8	4.4	4.6	4.6	222
229							4.4	4.5		4.1	4.2	4.2	229
236										3.7	3.9	3.8	236

TAB 1555050 / 1555099 / 1555148

View thousands of Crane Specifications on FreeCraneSpecs.com

Lifting capacities on the hydraulically or mechanically variable folding jib
Forces de levage à la fléchette pliante à variation hydraulique ou mécanique

43 – 221 ft | 63 ft | 360° | 159000 lbs | 85%

ft	43 ft / 63 ft			88 ft / 63 ft			103 ft / 63 ft			132 ft / 63 ft			147 ft / 63 ft			162 ft / 63 ft			ft
	0°	22.5°	45°	0°	22.5°	45°	0°	22.5°	45°	0°	22.5°	45°	0°	22.5°	45°	0°	22.5°	45°	
10	46.1																		10
12	46.1																		12
14	46.1																		14
16	46.1																		16
18	46.1			44.1															18
20	46.1			44.3			37.5												20
24	45.4			44.2			37.7												24
28	42.3			43.4			37.5			33.6									28
32	38.1	28		42.2			36.8			33.7			30.7						32
36	34	26.7		40.5			36.1			33.5			30.8			27.4			36
40	30.8	25.1		38.7	25.5		34.3	23.5		33.1			30.6			27.2			40
47	26	22.5	18.2	34.9	25.5		30.9	23.2		32	22.3		30			26.6			47
54	22.3	20.5	18	31	25	18	28.1	21.5		29.6	22		29	20.9		25.8	20.4		54
61	19.4	18.9	17	27.5	23.2	17.7	25.6	20	15.6	27.4	20.6		27.2	20.5		24.9	20.1		61
68	17.1	17.4	16.2	24.8	21.7	17.1	23.3	18.7	15.4	25.5	19.4	15.3	25.5	19.4	15.3	23.9	19		68
75	15.2	16.2	15.6	22.3	20.5	16.5	21.4	17.5	14.8	23.7	18.3	15.1	23.8	18.4	15.1	22.8	18.1	14.6	75
82	13.6	15.2	15	20.3	19.3	16	19.5	16.4	14.2	22	17.4	14.6	22.2	17.4	14.6	21.6	17.2	14.5	82
89	12.3	14.4		18.4	18.3	15.6	18	15.5	13.7	20.5	16.5	14.1	20.6	16.6	14.1	20.4	16.4	14.1	89
96				16.8	17.3	15.3	16.8	14.6	13.3	19	15.6	13.7	19.4	15.8	13.7	19.3	15.7	13.7	96
103				15.6	16.5	15	15.5	13.9	12.9	17.7	14.9	13.3	18.2	15.1	13.4	18.2	15.1	13.4	103
110				14.3	15.8	14.8	14.6	13.2	12.5	16.6	14.3	13	17.1	14.5	13.1	17.3	14.5	13.1	110
117				13.4	15.2	14.7	13.8	12.7	12.1	15.7	13.7	12.6	16.2	13.9	12.8	16.4	14	12.8	117
124				12.6	14.7	14.7	12.9	12.2	11.9	14.7	13.2	12.3	15.4	13.4	12.5	15.5	13.5	12.5	124
131				11.9	14.4	14.7	12.3	11.7	11.7	14	12.7	12.1	14.6	13	12.2	14.6	13.1	12.2	131
138							11.8	11.4	11.6	13.4	12.3	11.8	13.8	12.6	11.9	13.7	12.6	12	138
145							11.2	11.1		12.8	11.9	11.7	13.3	12.2	11.8	12.8	12.2	11.8	145
152							10.6			12.2	11.6	11.6	12.8	11.8	11.6	11.9	11.9	11.6	152
159										11.8	11.3	11.5	12.3	11.6	11.5	11.2	11.5	11.5	159
166										11.4	11.1	11.5	11.8	11.3	11.4	10.5	11	11.2	166
173										11	10.9		11.3	11	11.3	9.9	10.3	10.6	173
180										10.3			10.7	10.7	11.1	9.2	9.7	9.9	180
187													10.2	10.4		8.7	9.1	9.2	187
194																8.1	8.5	8.5	194
201																7.6	7.9		201
208																5.8			208

TAB 1555057 / 1555106 / 1555155

View thousands of Crane Specifications on FreeCraneSpecs.com

Lifting capacities on the hydraulically or mechanically variable folding jib
Forces de levage à la fléchette pliante à variation hydraulique ou mécanique

43 – 221 ft | 63 ft | 360° | 159000 lbs | 85%

↔ ft	177 ft			191 ft			206 ft			221 ft			↔ ft
	63 ft			63 ft			63 ft			63 ft			
	0°	22.5°	45°	0°	22.5°	45°	0°	22.5°	45°	0°	22.5°	45°	
36	22.7												36
40	22.7			18.9			15.4						40
47	22.6			18.8			15.4			12.3			47
54	22.2			18.3			15			12.2			54
61	21.8	18.5		18			14.7			12			61
68	21.3	18.2		17.5	16.5		14.5			11.8			68
75	20.7	17.4		17	16.2		14.3	13.2		11.7			75
82	20	16.6	14	16.3	15.6		13.8	12.9		11.5	10.4		82
89	19	15.9	13.9	15.7	15	13.3	13.2	12.4		11.1	10.2		89
96	17.9	15.3	13.5	15	14.3	13.2	12.7	11.9	10.8	10.6	9.8	9.3	96
103	16.8	14.7	13.2	14.2	13.7	12.9	12.1	11.4	11.1	10.1	9.5	9.1	103
110	15.8	14.2	12.9	13.5	13	12.6	11.5	10.9	10.7	9.7	9.1	8.8	110
117	14.8	13.8	12.6	12.7	12.4	12.2	10.9	10.4	10.3	9.3	8.8	8.5	117
124	13.9	13.3	12.4	12.1	11.9	11.9	10.4	10	9.9	8.9	8.5	8.2	124
131	12.9	12.8	12.1	11.4	11.3	11.4	9.8	9.6	9.5	8.5	8.1	8	131
138	12.1	12.2	11.9	10.8	10.7	10.9	9.4	9.2	9.2	8.1	7.8	7.7	138
145	11.3	11.6	11.6	10.2	10.2	10.4	8.9	8.8	8.9	7.7	7.5	7.5	145
152	10.6	11.1	11.3	9.5	9.8	9.9	8.4	8.4	8.5	7.4	7.2	7.2	152
159	9.9	10.4	10.8	8.9	9.2	9.5	8	8	8.2	7	6.9	7	159
166	9.2	9.7	10.1	8.4	8.7	9	7.5	7.7	7.8	6.7	6.6	6.7	166
173	8.7	9.1	9.4	7.8	8.2	8.5	7.1	7.3	7.5	6.3	6.4	6.5	173
180	8.1	8.5	8.7	7.2	7.6	7.9	6.6	6.9	7.1	6	6.1	6.2	180
187	7.6	7.9	8.1	6.8	7.1	7.4	6.2	6.5	6.7	5.6	5.8	6	187
194	7.1	7.4	7.5	6.3	6.6	6.8	5.8	6.1	6.3	5.3	5.5	5.7	194
201	6.6	6.9	7	5.8	6.2	6.3	5.3	5.7	5.9	4.9	5.2	5.4	201
208	6.2	6.4	6.4	5.4	5.7	5.8	4.9	5.3	5.5	4.6	4.9	5.1	208
215	5.7	5.9		5	5.2	5.3	4.5	4.9	5	4.2	4.6	4.8	215
222	5.1			4.6	4.8	4.8	4.1	4.4	4.5	3.8	4.2	4.4	222
229				4.3	4.4		3.7	4	4.1	3.5	3.8	3.9	229
236				3.7	4.1		3.4	3.6	3.6	3.1	3.4	3.4	236
243							3.1	3.2		2.8	3	3	243
250										2.4	2.6	2.6	250

TAB 1555057 / 1555106 / 1555155

View thousands of Crane Specifications on FreeCraneSpecs.com

Lifting capacities on the hydraulically or mechanically variable folding jib
Forces de levage à la fléchette pliante à variation hydraulique ou mécanique

43 – 221 ft | 72 ft | 360° | 159000 lbs | 85%

ft	43 ft / 72 ft			88 ft / 72 ft			103 ft / 72 ft			132 ft / 72 ft			147 ft / 72 ft			162 ft / 72 ft			ft
	0°	22.5°	45°	0°	22.5°	45°	0°	22.5°	45°	0°	22.5°	45°	0°	22.5°	45°	0°	22.5°	45°	
10	31.8																		10
12	32																		12
14	32.1																		14
16	31.9																		16
18	31.5																		18
20	31.2			29.2			24.2												20
24	29.9			29.2			24.4												24
28	28.5			28.6			24.5			22.6									28
32	27			28.1			24.3			22.8			21.3						32
36	25.5			27.3			24.1			22.7			21.4			19.7			36
40	24.1	19		26.3	18.5		23.7			22.5			21.3			19.7			40
47	21.7	17.6		24.7	18.4		22.8	17.1		22.2			21.1			19.6			47
54	19.4	16.3	13.4	22.9	17.4		21.8	16.9		21.5	16.5		20.7	16.3		19.4			54
61	17.3	15.3	13.3	21.3	16.5	13.2	20.7	16.1		20.8	16.3		20.1	16.1		19.1	15.4		61
68	15.3	14.4	12.8	19.8	15.7	13.1	19.6	15.5	12.8	20	15.7		19.5	15.5		18.6	15.3		68
75	13.8	13.6	12.4	18.4	15	12.8	18.6	14.9	12.7	19.1	15.1	12.5	18.8	15	12.5	18.1	14.8		75
82	12.4	13	12.1	17.1	14.4	12.5	17.6	14.3	12.4	18.3	14.6	12.4	18.1	14.6	12.4	17.5	14.4	12.2	82
89	11.4	12.5	12	15.8	13.8	12.2	16.6	13.8	12.1	17.5	14.2	12.2	17.4	14.2	12.2	17	14	12.1	89
96	10.5	12.2	12	14.5	13.4	12	15.7	13.3	11.8	16.8	13.8	12	16.8	13.8	12	16.4	13.6	11.9	96
103	9.7	12.1		13.5	13	11.9	14.7	12.7	11.5	16	13.4	11.8	16.1	13.4	11.9	15.9	13.3	11.8	103
110				12.7	12.6	11.8	13.7	12.2	11.2	15.3	12.9	11.5	15.4	13	11.7	15.3	12.9	11.6	110
117				11.9	12.3	11.8	13	11.7	11	14.6	12.4	11.3	14.8	12.6	11.4	14.7	12.6	11.4	117
124				11.2	12.1	11.8	12.3	11.2	10.7	13.8	12	11.1	14.1	12.2	11.2	14.2	12.2	11.2	124
131				10.6	11.9	11.8	11.7	10.8	10.5	13.1	11.6	10.9	13.6	11.8	10.9	13.6	11.9	10.9	131
138				10.1	11.9		11.1	10.4	10.4	12.5	11.2	10.7	13	11.4	10.8	13	11.5	10.8	138
145				9.6			10.7	10.1	10.4	12	10.8	10.5	12.4	11.1	10.6	12.4	11.2	10.6	145
152							10.2	9.9		11.5	10.5	10.4	11.9	10.8	10.4	11.8	10.9	10.4	152
159							9.9			11.1	10.3	10.3	11.5	10.5	10.3	11.2	10.6	10.3	159
166										10.7	10	10.2	11.1	10.3	10.2	10.6	10.4	10.2	166
173										10.3	9.9	10.2	10.7	10	10.2	10	10	10	173
180										10	9.7		10.4	9.8	10.2	9.4	9.6	9.7	180
187										9.7	9.7		10	9.7	10.2	8.8	9.1	9.3	187
194													9.7	9.6		8.3	8.6	8.8	194
201													9			7.8	8.1	8.2	201
208																7.3	7.6		208
215																6.8	7		215

TAB 1555064 / 1555113 / 1555162

View thousands of Crane Specifications on FreeCraneSpecs.com

Lifting capacities on the hydraulically or mechanically variable folding jib
Forces de levage à la fléchette pliante à variation hydraulique ou mécanique

43 – 221 ft | 72 ft | 360° | 159000 lbs | 85%

ft	177 ft 72 ft 0°	177 ft 72 ft 22.5°	177 ft 72 ft 45°	191 ft 72 ft 0°	191 ft 72 ft 22.5°	191 ft 72 ft 45°	206 ft 72 ft 0°	206 ft 72 ft 22.5°	206 ft 72 ft 45°	221 ft 72 ft 0°	221 ft 72 ft 22.5°	221 ft 72 ft 45°	ft
40	17.7			15.6			13.3						40
47	17.8			15.6			13.3			10.7			47
54	17.7			15.4			13			10.7			54
61	17.5			15.2			12.8			10.6			61
68	17.3	14.5		15			12.6			10.4			68
75	16.8	14.4		14.8	13.5		12.5			10.3			75
82	16.4	14		14.6	13.4		12.2	11.8		10.1			82
89	16	13.7	11.9	14.4	13.1		11.9	11.6		9.9	9.4		89
96	15.6	13.4	11.8	14	12.9	11.5	11.7	11.2		9.7	9.2		96
103	15.1	13.1	11.7	13.5	12.6	11.4	11.3	10.7	10.4	9.4	8.8	8.4	103
110	14.7	12.8	11.5	12.8	12.2	11.3	10.9	10.3	10.1	9.1	8.5	8.2	110
117	14.1	12.4	11.3	12.2	11.8	11.1	10.4	9.9	9.8	8.8	8.2	7.9	117
124	13.4	12.1	11.1	11.6	11.4	10.9	9.9	9.5	9.4	8.4	7.9	7.7	124
131	12.6	11.7	10.9	11	10.9	10.7	9.5	9.1	9.1	8.1	7.6	7.4	131
138	11.9	11.4	10.7	10.5	10.4	10.4	9	8.8	8.7	7.7	7.4	7.2	138
145	11.2	11.1	10.5	9.9	9.9	10	8.6	8.5	8.4	7.3	7.1	7	145
152	10.5	10.7	10.4	9.4	9.5	9.6	8.2	8.1	8.2	7	6.8	6.8	152
159	9.9	10.4	10.2	8.8	9.1	9.3	7.8	7.8	7.9	6.8	6.6	6.6	159
166	9.3	9.8	10	8.3	8.6	8.9	7.4	7.5	7.6	6.4	6.3	6.4	166
173	8.6	9.2	9.4	7.8	8.2	8.5	7	7.1	7.3	6.1	6.1	6.2	173
180	8.1	8.6	8.9	7.3	7.7	8	6.6	6.8	7	5.8	5.9	6	180
187	7.6	8	8.3	6.8	7.2	7.5	6.2	6.5	6.7	5.5	5.6	5.8	187
194	7.2	7.5	7.8	6.3	6.7	7	5.8	6.1	6.3	5.2	5.4	5.6	194
201	6.7	7	7.2	5.9	6.3	6.5	5.4	5.7	6	4.9	5.1	5.3	201
208	6.2	6.5	6.7	5.5	5.9	6	5	5.4	5.6	4.6	4.9	5.1	208
215	5.8	6.1	6.1	5.1	5.4	5.5	4.6	5	5.2	4.2	4.6	4.8	215
222	5.4	5.7		4.7	5	5.1	4.2	4.6	4.7	3.9	4.3	4.5	222
229	5	5.2		4.4	4.6	4.6	3.8	4.2	4.3	3.5	3.9	4.1	229
236				4	4.2	4.1	3.5	3.8	3.8	3.2	3.6	3.7	236
243							3.2	3.4	3.4	2.8	3.2	3.2	243
250							2.9	3		2.5	2.8	2.8	250
257											2.4		257

TAB 1555064 / 1555113 / 1555162

View thousands of Crane Specifications on FreeCraneSpecs.com

Lifting heights
Hauteurs de levage

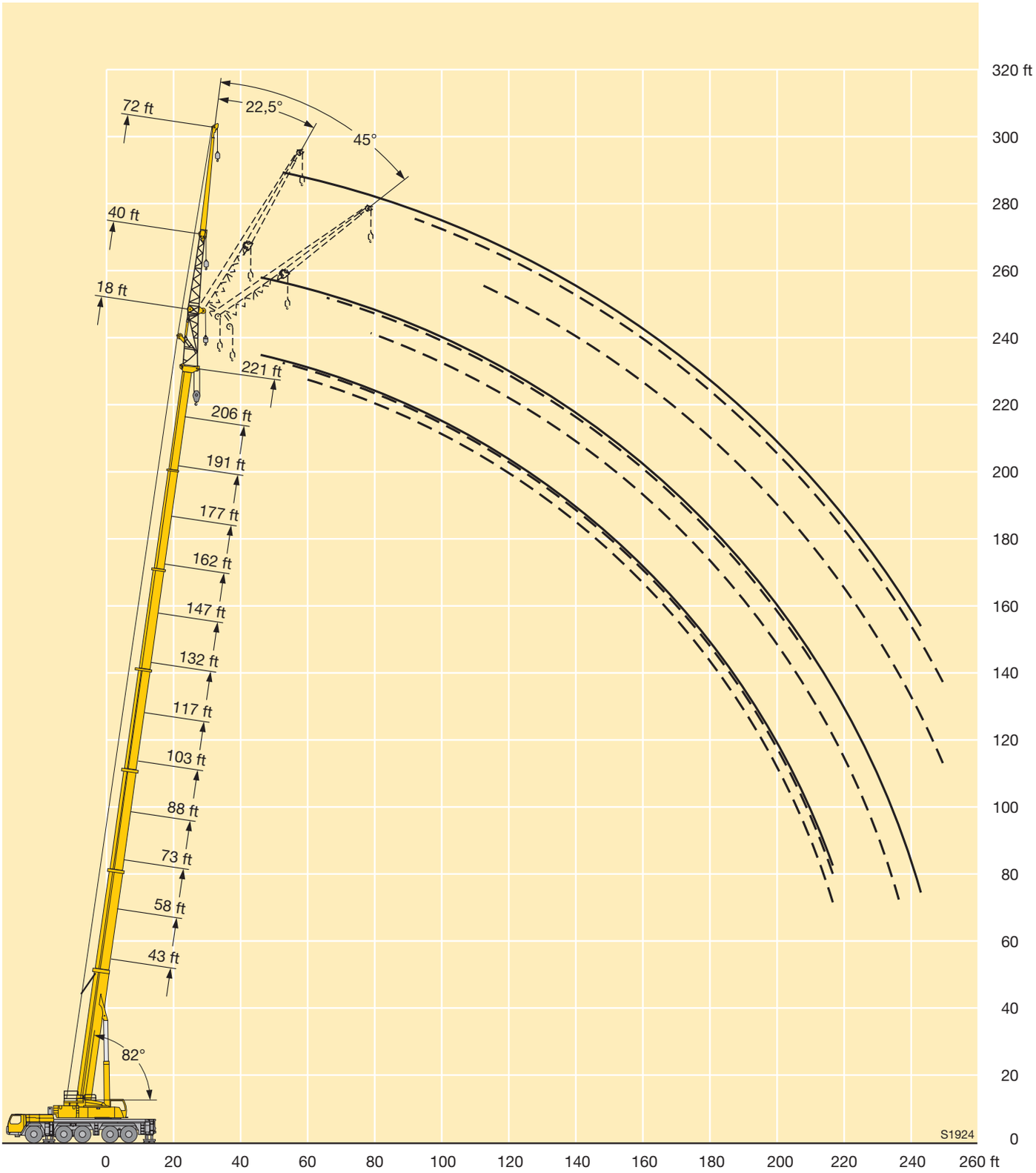

View thousands of Crane Specifications on FreeCraneSpecs.com

Lifting capacities on the hydraulically or mechanically variable folding jib
Forces de levage à la fléchette pliante à variation hydraulique ou mécanique

43 – 221 ft | 86 ft | 360° | 159000 lbs | 85%

↔ ft	43 ft			88 ft			103 ft			132 ft			147 ft			162 ft			↔ ft
	86 ft			86 ft			86 ft			86 ft			86 ft			86 ft			
	0°	22.5°	45°	0°	22.5°	45°	0°	22.5°	45°	0°	22.5°	45°	0°	22.5°	45°	0°	22.5°	45°	
14	31.3																		14
16	31.5																		16
18	31.3																		18
20	31																		20
24	29.9			27.7			22.6												24
28	28.3			27.6			22.8												28
32	26.5			26.9			22.8			20.6									32
36	24.7			26.1			22.7			20.7			19.1						36
40	22.8			25			22.5			20.7			19.2			17.4			40
47	19.6	16.2		22.9			21.7			20.4			19			17.4			47
54	17	14.7		20.9	14.6		20.5	14.2		20			18.8			17.2			54
61	14.8	13.5		19	14.4		19.3	14		19.1	13.6		18.2			16.9			61
68	13.1	12.5	10.2	17.3	13.6		18.1	13.3		18.2	13.4		17.5	12.9		16.5			68
75	11.7	11.6	10	15.7	12.8	10	16.8	12.6		17.3	12.8		16.8	12.7		15.9	12.2		75
82	10.5	10.9	9.5	14.2	12.1	9.9	15.6	12	9.6	16.4	12.3		16	12.2		15.4	12		82
89	9.6	10.2	9.1	12.9	11.5	9.5	14.5	11.5	9.5	15.5	11.8	9.4	15.3	11.7	9.4	14.8	11.6		89
96	8.8	9.7	8.8	12	11	9.3	13.3	11	9.2	14.6	11.3	9.3	14.6	11.3	9.2	14.2	11.2	9.1	96
103	8.1	9.2	8.7	11.1	10.5	9	12.4	10.5	9	13.8	10.9	9.1	13.9	10.9	9.1	13.7	10.8	9	103
110	7.5	8.9	8.6	10.3	10.1	8.8	11.7	10.1	8.8	13	10.5	8.9	13.2	10.6	8.9	13.1	10.5	8.8	110
117	7	8.7		9.6	9.7	8.6	10.9	9.7	8.6	12.2	10.2	8.7	12.6	10.2	8.7	12.6	10.2	8.7	117
124				9.1	9.3	8.5	10.2	9.3	8.5	11.6	9.8	8.6	12	9.9	8.6	12	9.9	8.6	124
131				8.5	9.1	8.5	9.7	8.9	8.3	11	9.5	8.5	11.4	9.6	8.5	11.5	9.6	8.5	131
138				8	8.9	8.5	9.2	8.6	8.2	10.4	9.2	8.3	10.9	9.3	8.4	11	9.4	8.4	138
145				7.6	8.7	8.5	8.7	8.3	8	9.9	8.9	8.2	10.4	9	8.3	10.6	9.1	8.3	145
152				7.2	8.6		8.2	8	8	9.4	8.6	8.1	9.9	8.8	8.1	10.2	8.8	8.2	152
159				6.9			7.9	7.7	8	9	8.3	8	9.4	8.5	8	9.7	8.6	8.1	159
166							7.5	7.6		8.6	8.1	8	9.1	8.3	8	9.3	8.4	8	166
173							7.2			8.2	7.9	7.9	8.7	8	7.9	8.9	8.2	7.9	173
180										7.9	7.7	7.9	8.3	7.9	7.8	8.5	7.9	7.8	180
187										7.6	7.5	7.9	8	7.7	7.8	8	7.7	7.7	187
194										7.4	7.5		7.8	7.5	7.8	7.6	7.5	7.6	194
201										7.1	7.4		7.5	7.5	7.8	7.1	7.3	7.6	201
208													7.3	7.4		6.7	7	7.2	208
215													7.1			6.3	6.6	6.6	215
222																5.9	6.1		222
229																5.3	5.6		229

TAB 1555071 / 1555120 / 1555169

View thousands of Crane Specifications on FreeCraneSpecs.com

Lifting capacities on the hydraulically or mechanically variable folding jib
Forces de levage à la fléchette pliante à variation hydraulique ou mécanique

ft	177 ft			191 ft			206 ft			221 ft			ft
	86 ft			86 ft			86 ft			86 ft			
	0°	22.5°	45°	0°	22.5°	45°	0°	22.5°	45°	0°	22.5°	45°	
40	15.4			13.3									40
47	15.4			13.3			10.9						47
54	15.3			13			10.8			8.6			54
61	15			12.8			10.6			8.5			61
68	14.8			12.6			10.4			8.4			68
75	14.5	11.8		12.4			10.2			8.3			75
82	14.2	11.6		12.2	10.9		10			8.1			82
89	13.9	11.3		12.1	10.7		9.9	9.7		8			89
96	13.5	10.9		11.9	10.5		9.7	9.5		7.9	7.6		96
103	13.1	10.6	8.8	11.7	10.2		9.6	9.3		7.7	7.4		103
110	12.7	10.3	8.7	11.3	9.9	8.5	9.4	8.9		7.6	7.1		110
117	12.2	10	8.6	10.8	9.7	8.4	9.1	8.5	8.2	7.5	6.8		117
124	11.8	9.7	8.5	10.3	9.5	8.3	8.7	8.2	8	7.2	6.6	6.3	124
131	11.3	9.5	8.4	9.9	9.2	8.3	8.3	7.8	7.8	6.9	6.3	6.1	131
138	10.7	9.3	8.3	9.4	8.9	8.2	7.9	7.5	7.5	6.6	6.1	5.9	138
145	10.2	9	8.2	8.9	8.6	8.1	7.5	7.2	7.2	6.3	5.8	5.7	145
152	9.7	8.8	8.1	8.4	8.3	8	7.2	6.9	6.9	6	5.6	5.5	152
159	9.1	8.6	8	7.9	8	7.9	6.8	6.7	6.7	5.7	5.5	5.3	159
166	8.6	8.4	7.9	7.5	7.7	7.8	6.5	6.4	6.4	5.4	5.3	5.2	166
173	8	8.1	7.8	7.1	7.3	7.5	6.1	6.1	6.2	5.2	5.1	5	173
180	7.5	7.7	7.7	6.6	6.9	7.2	5.8	5.9	6	4.9	4.9	4.9	180
187	7	7.3	7.4	6.2	6.6	6.9	5.4	5.6	5.7	4.6	4.7	4.7	187
194	6.5	6.9	7.2	5.7	6.2	6.5	5	5.3	5.5	4.3	4.5	4.5	194
201	6.1	6.5	6.8	5.3	5.8	6.1	4.6	5	5.2	4	4.2	4.4	201
208	5.6	6.1	6.3	4.9	5.4	5.7	4.2	4.7	4.9	3.7	4	4.2	208
215	5.2	5.6	5.8	4.5	4.9	5.2	3.9	4.3	4.6	3.4	3.7	4	215
222	4.9	5.2	5.2	4.1	4.5	4.7	3.5	4	4.3	3.1	3.5	3.7	222
229	4.5	4.8	4.7	3.7	4.1	4.2	3.1	3.6	3.8	2.7	3.2	3.4	229
236	4.1	4.4		3.3	3.7	3.7	2.8	3.2	3.4	2.4	2.9	3.2	236
243				3	3.3		2.4	2.8	2.9		2.5	2.7	243
250				2.6	2.9			2.4					250

TAB 1555071 / 1555120 / 1555169

View thousands of Crane Specifications on FreeCraneSpecs.com

Lifting heights
Hauteurs de levage

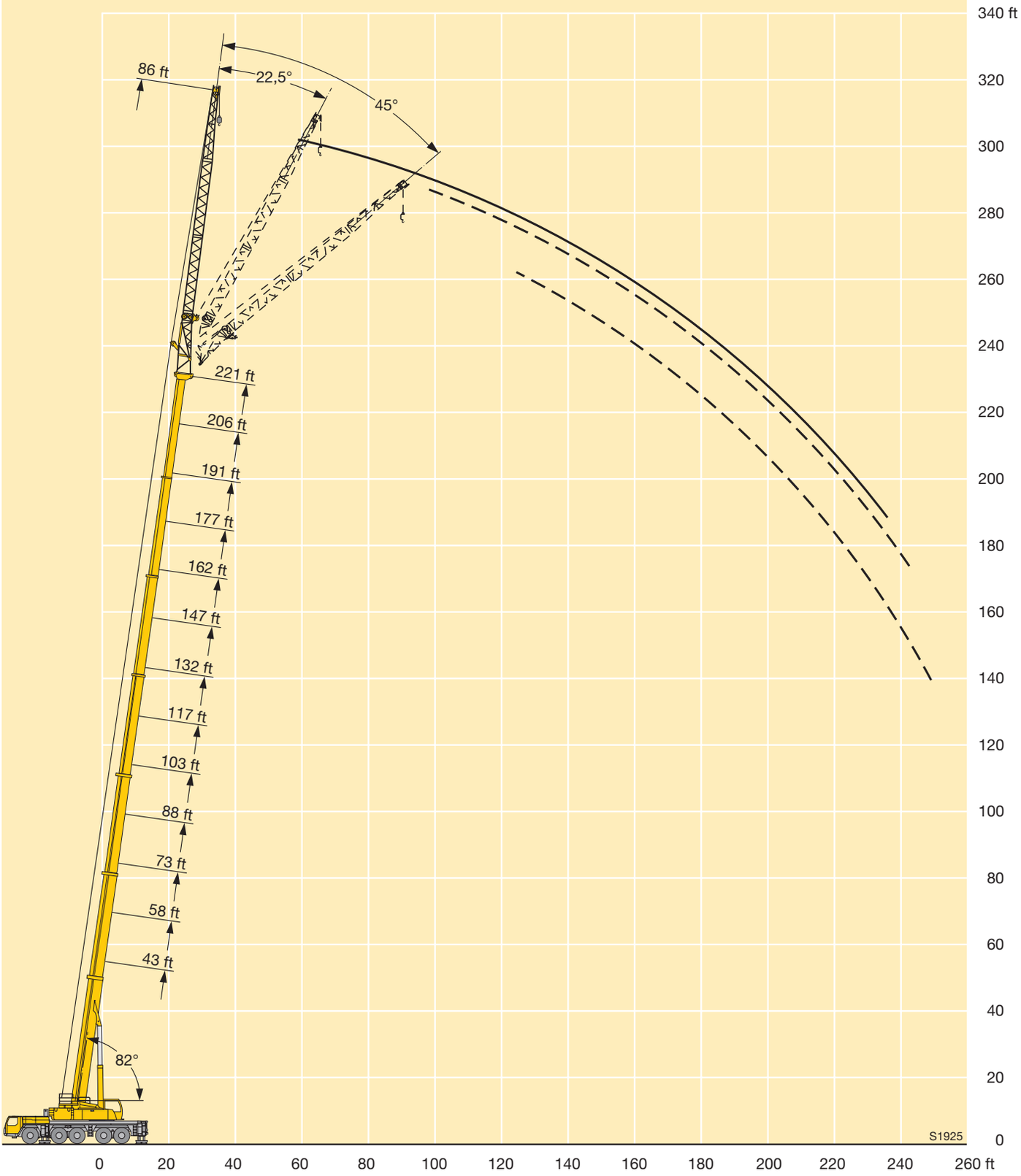

View thousands of Crane Specifications on FreeCraneSpecs.com

Lifting capacities on the hydraulically or mechanically variable folding jib
Forces de levage à la fléchette pliante à variation hydraulique ou mécanique

43 – 221 ft | 95 ft | 360° | 159000 lbs | 85%

ft	43 ft 95 ft 0°	43 ft 95 ft 22.5°	43 ft 95 ft 45°	88 ft 95 ft 0°	88 ft 95 ft 22.5°	88 ft 95 ft 45°	103 ft 95 ft 0°	103 ft 95 ft 22.5°	103 ft 95 ft 45°	132 ft 95 ft 0°	132 ft 95 ft 22.5°	132 ft 95 ft 45°	147 ft 95 ft 0°	147 ft 95 ft 22.5°	147 ft 95 ft 45°	162 ft 95 ft 0°	162 ft 95 ft 22.5°	162 ft 95 ft 45°	ft
18	21.1																		18
20	21.3			19															20
24	21.5			19.1															24
28	21.4			19.3			17.2												28
32	20.9			19.4			17.3			16									32
36	20.3			19.5			17.4			16.1			15.2						36
40	19.5			19.4			17.4			16.1			15.2			14.1			40
47	17.8	13.3		18.6			17.1			16.1			15.2			14.2			47
54	16.2	13.1		17.7	12.8		16.4			16			15.2			14.1			54
61	14.6	12.1		16.6	12.6		15.7	11.8		15.5			15			14.1			61
68	13.1	11.2		15.6	11.9		14.9	11.6		14.9	11.3		14.5			13.9			68
75	11.9	10.5	8.7	14.6	11.2		14.1	11		14.4	11.1		14	10.8		13.5	10.6		75
82	10.7	9.8	8.5	13.6	10.7	8.5	13.4	10.5		13.8	10.7		13.5	10.6		13.1	10.4		82
89	9.7	9.2	8.1	12.7	10.2	8.4	12.6	10.1	8.2	13.1	10.3		13	10.2		12.6	10.1		89
96	8.9	8.7	7.8	11.9	9.7	8.1	11.9	9.6	8.1	12.5	9.9	8	12.5	9.8	8	12.2	9.7		96
103	8.2	8.3	7.6	11.1	9.3	7.9	11.3	9.3	7.8	12	9.5	7.9	12	9.5	7.9	11.8	9.4	7.8	103
110	7.6	7.9	7.4	10.3	8.9	7.7	10.6	8.9	7.7	11.5	9.2	7.7	11.5	9.2	7.7	11.3	9.1	7.6	110
117	7	7.6	7.4	9.6	8.6	7.5	10	8.6	7.5	11	8.9	7.6	11.1	9	7.6	10.9	8.9	7.5	117
124	6.5	7.5		9	8.3	7.4	9.4	8.3	7.4	10.5	8.6	7.5	10.6	8.7	7.4	10.6	8.6	7.4	124
131				8.5	8	7.3	8.8	8.1	7.3	10	8.4	7.3	10.2	8.4	7.3	10.2	8.4	7.3	131
138				7.9	7.8	7.3	8.4	7.8	7.2	9.5	8.2	7.3	9.8	8.2	7.3	9.8	8.2	7.2	138
145				7.5	7.6	7.3	8	7.7	7.2	9	7.9	7.2	9.4	8	7.2	9.5	8	7.1	145
152				7.1	7.4	7.3	7.5	7.4	7.2	8.5	7.8	7.1	9	7.8	7.1	9.1	7.8	7.1	152
159				6.7	7.3		7.2	7.2	7.2	8.2	7.6	7.1	8.6	7.6	7.1	8.8	7.7	7	159
166				6.4	7.3		6.9	7	7.2	7.9	7.4	7.1	8.2	7.5	7.1	8.4	7.5	7	166
173							6.6	6.8		7.5	7.3	7.1	7.9	7.4	7.1	8.1	7.4	7	173
180							6.4	6.8		7.2	7.1	7.1	7.6	7.2	7.1	7.8	7.3	7	180
187										6.9	6.9	7.1	7.3	7.1	7.1	7.5	7.1	7	187
194										6.7	6.8	7.1	7	6.9	7.1	7.3	7	7	194
201										6.5	6.7		6.8	6.8	7.1	7	6.9	7	201
208										6.3	6.7		6.6	6.7	7.1	6.7	6.7	7	208
215										3.5			6.4	6.7		6.4	6.6	6.8	215
222													6.2	6.7		6	6.3	6.4	222
229																5.6	5.8		229
236																5.1	5.4		236

TAB 1555078 / 1555127 / 1555176

View thousands of Crane Specifications on FreeCraneSpecs.com

Lifting capacities on the hydraulically or mechanically variable folding jib
Forces de levage à la fléchette pliante à variation hydraulique ou mécanique

43 – 221 ft | 95 ft | 360° | 159000 lbs | 85%

↔ ft	177 ft 95 ft 0°	177 ft 95 ft 22.5°	177 ft 95 ft 45°	191 ft 95 ft 0°	191 ft 95 ft 22.5°	191 ft 95 ft 45°	206 ft 95 ft 0°	206 ft 95 ft 22.5°	206 ft 95 ft 45°	221 ft 95 ft 0°	221 ft 95 ft 22.5°	221 ft 95 ft 45°	↔ ft
47	12.9			11.4			9.6						47
54	12.9			11.3			9.6			7.7			54
61	12.8			11.2			9.4			7.7			61
68	12.7			11			9.2			7.5			68
75	12.5			10.9			9.1			7.4			75
82	12.2	9.9		10.7			8.9			7.3			82
89	11.9	9.8		10.6	9.2		8.8			7.1			89
96	11.6	9.5		10.5	9.1		8.7	8.5		7			96
103	11.3	9.2		10.4	8.9		8.7	8.4		7	6.9		103
110	10.9	9	7.5	10.2	8.6		8.6	8.2		6.9	6.7		110
117	10.6	8.7	7.4	9.9	8.4	7.3	8.4	8		6.9	6.4		117
124	10.2	8.5	7.3	9.6	8.2	7.2	8.1	7.8	7	6.8	6.2		124
131	9.9	8.3	7.2	9.3	8.1	7.1	7.8	7.5	7	6.5	6	5.7	131
138	9.7	8.1	7.1	9	7.9	7	7.5	7.2	6.9	6.3	5.8	5.6	138
145	9.4	7.9	7.1	8.6	7.7	7	7.2	6.9	6.8	6	5.5	5.4	145
152	9.1	7.7	7	8.2	7.6	6.9	6.9	6.6	6.6	5.7	5.3	5.2	152
159	8.8	7.6	7	7.8	7.4	6.9	6.6	6.4	6.4	5.5	5.2	5	159
166	8.3	7.5	6.9	7.4	7.3	6.9	6.3	6.1	6.2	5.2	5	4.9	166
173	7.9	7.3	6.9	7	7	6.8	6	5.9	6	4.9	4.8	4.7	173
180	7.4	7.2	6.9	6.6	6.7	6.7	5.7	5.6	5.7	4.7	4.6	4.6	180
187	7	6.9	6.9	6.2	6.5	6.6	5.3	5.4	5.5	4.4	4.4	4.5	187
194	6.5	6.7	6.8	5.8	6.2	6.4	5	5.2	5.3	4.2	4.2	4.3	194
201	6.1	6.5	6.7	5.3	5.8	6.1	4.6	5	5.1	3.9	4.1	4.2	201
208	5.7	6.2	6.5	4.9	5.5	5.8	4.2	4.7	4.9	3.6	3.9	4.1	208
215	5.3	5.8	6	4.5	5.1	5.4	3.9	4.4	4.7	3.4	3.7	3.9	215
222	4.9	5.4	5.5	4.2	4.7	5	3.5	4	4.4	3.1	3.5	3.7	222
229	4.6	4.9	5	3.8	4.3	4.5	3.2	3.7	4	2.8	3.2	3.5	229
236	4.2	4.6	4.5	3.4	3.9	4	2.9	3.4	3.7	2.5	2.9	3.2	236
243	3.9	4.2		3.1	3.5	3.5	2.5	3	3.2		2.7	2.9	243
250				2.8	3.1			2.6	2.7			2.6	250
257				2.4	2.7								257

TAB 1555078 / 1555127 / 1555176

View thousands of Crane Specifications on FreeCraneSpecs.com

Lifting heights
Hauteurs de levage

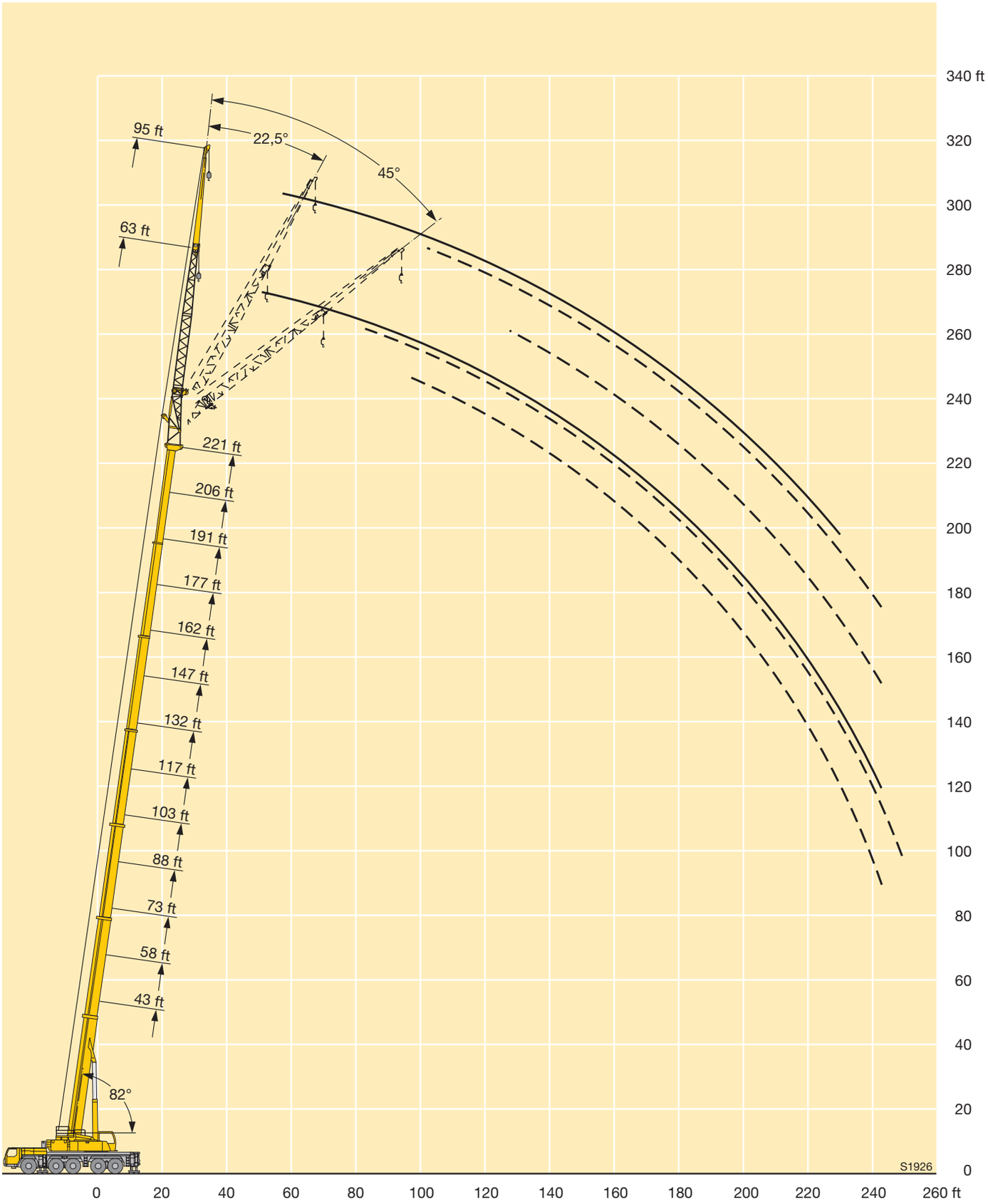

View thousands of Crane Specifications on FreeCraneSpecs.com

Lifting capacities on the hydraulically or mechanically variable folding jib
Forces de levage à la fléchette pliante à variation hydraulique ou mécanique

43 – 206 ft | 118 ft | 360° | 159000 lbs | 85%

↔ ft	43 ft			88 ft			103 ft			132 ft			147 ft			162 ft			↔ ft
	118 ft			118 ft			118 ft			118 ft			118 ft			118 ft			
	0°	22.5°	45°	0°	22.5°	45°	0°	22.5°	45°	0°	22.5°	45°	0°	22.5°	45°	0°	22.5°	45°	
28	15.2																		28
32	15.1			13.9															32
36	14.8			13.9			12.6			11.6									36
40	14.3			13.8			12.5			11.7			11						40
47	13.4			13.6			12.4			11.7			11			10.2			47
54	12.4			12.9			12.1			11.5			11			10.2			54
61	11.4	8.8		12.3			11.6			11.3			10.8			10.1			61
68	10.4	8.6		11.6	8.5		11			10.9			10.6			10			68
75	9.6	8		10.9	8.3		10.5	7.8		10.5			10.2			9.8			75
82	8.8	7.5		10.2	7.9		9.9	7.7		10.1	7.5		9.9			9.5			82
89	8	7		9.6	7.4		9.4	7.3		9.6	7.3		9.5	7.1		9.2	7		89
96	7.3	6.5	5.5	9	7		8.9	6.9		9.2	7		9.1	7		8.8	6.9		96
103	6.6	6.1	5.3	8.4	6.7	5.4	8.4	6.6		8.8	6.7		8.7	6.7		8.5	6.6		103
110	6.1	5.8	5.1	7.9	6.4	5.3	8	6.3	5.1	8.4	6.5		8.4	6.5		8.2	6.4		110
117	5.6	5.5	4.9	7.4	6.1	5.1	7.5	6.1	5	8	6.2	5	8	6.2	5	7.9	6.1		117
124	5.1	5.2	4.7	6.9	5.8	4.9	7.1	5.8	4.9	7.6	6	4.9	7.7	6	4.9	7.6	5.9	4.8	124
131	4.8	5	4.6	6.4	5.6	4.8	6.7	5.6	4.8	7.3	5.8	4.8	7.4	5.8	4.8	7.3	5.8	4.7	131
138	4.4	4.8		6.1	5.4	4.7	6.3	5.4	4.7	6.9	5.6	4.7	7.1	5.6	4.7	7	5.6	4.6	138
145	4.1	4.6		5.7	5.1	4.6	5.9	5.2	4.6	6.6	5.4	4.6	6.7	5.4	4.6	6.7	5.4	4.6	145
152				5.3	5	4.5	5.6	5	4.5	6.3	5.2	4.5	6.5	5.3	4.5	6.5	5.3	4.5	152
159				5	4.8	4.5	5.3	4.9	4.4	6	5.1	4.4	6.2	5.1	4.4	6.2	5.1	4.4	159
166				4.7	4.7	4.5	5	4.7	4.4	5.7	4.9	4.4	6	5	4.4	6	5	4.4	166
173				4.5	4.6	4.5	4.8	4.6	4.4	5.5	4.8	4.4	5.7	4.8	4.3	5.8	4.9	4.3	173
180				4.2	4.5		4.5	4.6	4.4	5.2	4.7	4.3	5.4	4.7	4.3	5.6	4.7	4.3	180
187				4	4.5		4.3	4.5	4.4	5	4.6	4.3	5.2	4.6	4.3	5.4	4.6	4.3	187
194				3.9			4.1	4.5		4.7	4.5	4.3	5	4.5	4.3	5.1	4.6	4.3	194
201							4	4.5		4.5	4.4	4.3	4.8	4.4	4.3	4.9	4.5	4.3	201
208							3.9			4.4	4.4	4.3	4.6	4.4	4.3	4.8	4.4	4.3	208
215										4.2	4.4	4.3	4.4	4.4	4.3	4.6	4.3	4.3	215
222										4	4.4		4.2	4.3	4.3	4.4	4.3	4.3	222
229										3.9	4.4		4.1	4.3	4.3	4.2	4.3	4.3	229
236													4	4.3		4.1	4.3	4.3	236
243													3.9			4	4.2		243
250																3.9	4.1		250
257																3.4			257

TAB 1555085 / 1555134 / 1555183

View thousands of Crane Specifications on FreeCraneSpecs.com

Lifting capacities on the hydraulically or mechanically variable folding jib
Forces de levage à la fléchette pliante à variation hydraulique ou mécanique

43 – 206 ft | 118 ft | 360° | 159000 lbs | 85%

ft	177 ft / 118 ft			191 ft / 118 ft		206 ft / 118 ft			ft
	0°	22.5°	45°	0°	22.5°	0°	22.5°	45°	
47	9.2			8.1					47
54	9.2			8.1					54
61	9.2			8.1					61
68	9.2			8		5.8			68
75	9.1			7.9		5.8			75
82	8.9			7.8		5.7			82
89	8.7			7.7		5.6			89
96	8.4	6.6		7.6		5.5			96
103	8.1	6.4		7.5	6.1	5.4			103
110	7.9	6.2		7.3	6	5.4			110
117	7.6	6		7.1	5.8	5.3	5		117
124	7.3	5.8		6.9	5.6	5.2	4.9		124
131	7.1	5.7	4.7	6.7	5.5	5	4.7		131
138	6.8	5.5	4.6	6.5	5.3	4.8	4.5	3.8	138
145	6.6	5.3	4.5	6.3	5.2	4.6	4.3	3.8	145
152	6.4	5.2	4.4	6.1	5.1	4.3	4.1	3.7	152
159	6.2	5	4.4	6	4.9	4.1	3.9	3.6	159
166	6	4.9	4.3	5.8	4.8	3.9	3.7	3.5	166
173	5.8	4.8	4.3	5.6	4.7	3.7	3.5	3.4	173
180	5.6	4.7	4.2	5.4	4.6	3.5	3.4	3.3	180
187	5.4	4.6	4.2	5.2	4.5	3.3	3.2	3.2	187
194	5.2	4.5	4.2	4.9	4.4	3	3	3.1	194
201	5	4.4	4.2	4.6	4.4	2.8	2.9	3	201
208	4.8	4.4	4.2	4.2	4.3	2.6	2.7	2.9	208
215	4.6	4.3	4.2	3.8	4.1	2.3	2.6	2.7	215
222	4.2	4.3	4.2	3.4	3.9		2.4	2.6	222
229	3.9	4.2	4.2	3.1	3.6		2.2	2.5	229
236	3.6	3.9	4.1	2.8	3.4			2.3	236
243	3.3	3.6	3.9	2.4	3.1				243
250	3	3.4	3.5		2.7				250
257	2.6	3.1							257
264		2.7							264

TAB 1555085 / 1555134 / 1555183

View thousands of Crane Specifications on FreeCraneSpecs.com

Lifting heights
Hauteurs de levage

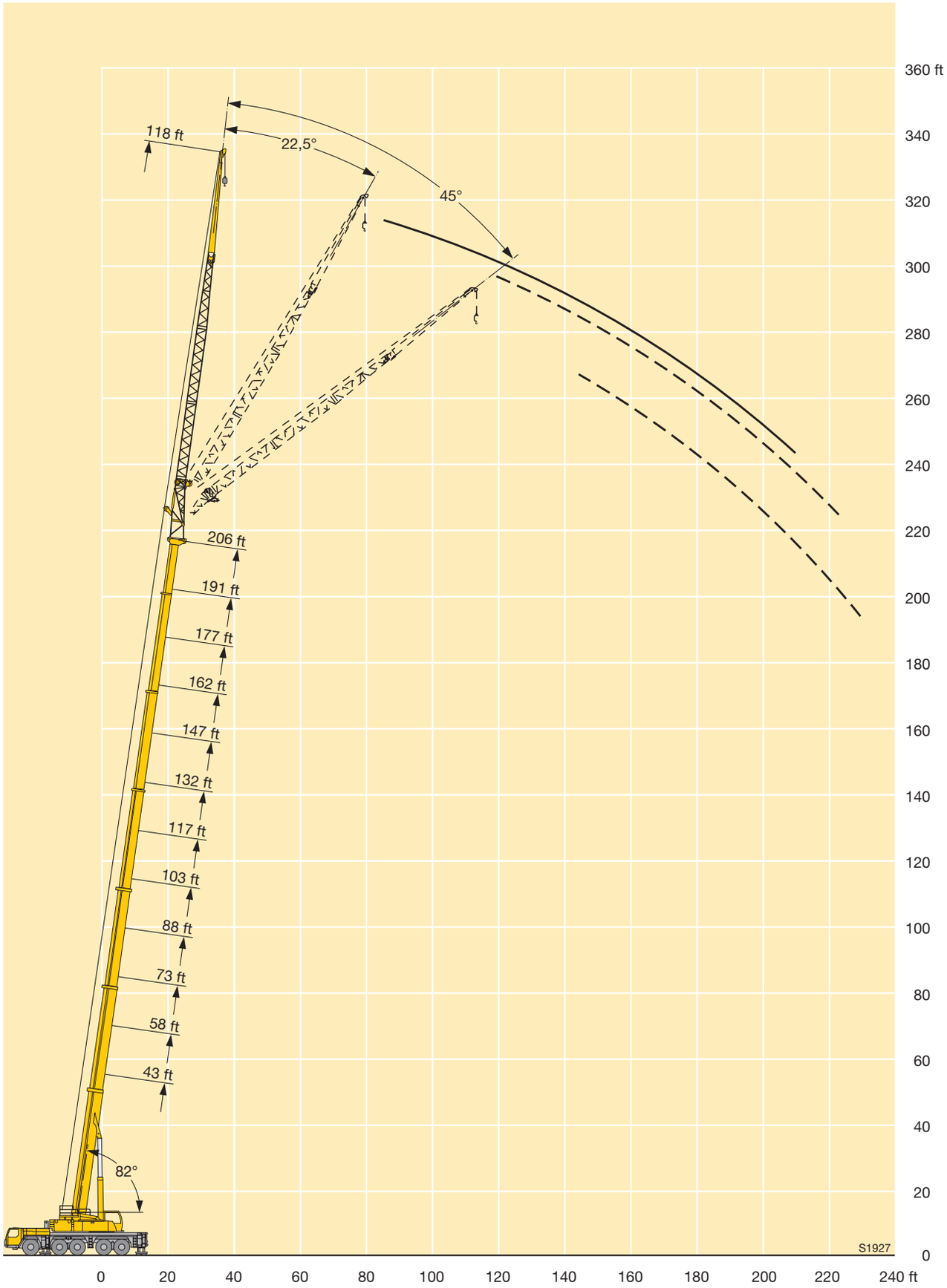

View thousands of Crane Specifications on FreeCraneSpecs.com

Lifting capacities on the hydraulically or mechanically variable folding jib with boom extension

Forces de levage à la fléchette pliante à variation hydraulique ou mécanique avec télescope rallongé

ft	43 ft + 23 ft			88 ft + 23 ft			103 ft + 23 ft			132 ft + 23 ft			147 ft + 23 ft			162 ft + 23 ft			ft
	40 ft			40 ft			40 ft			40 ft			40 ft			40 ft			
	0°	22.5°	45°	0°	22.5°	45°	0°	22.5°	45°	0°	22.5°	45°	0°	22.5°	45°	0°	22.5°	45°	
10	46.1																		10
12	46.1																		12
14	46.1																		14
16	46.1																		16
18	46.1			46.1															18
20	46.1	38		46.1			45.3												20
24	45.7	37.2		46.1			44.7												24
28	43.2	34.6		46.1			42.2			39.3									28
32	39	32.4		46.1	34.4		39.5			38.4			35.5						32
36	34.8	30.5	24.7	45.2	33		36.9	29.4		36.8			34.7			31.3			36
40	32	28.8	23.8	42	31.6	23.7	34.5	27.9	22.4	35.1	26.5		33.6	26.1		30.7			40
47	27.7	25.8	22.5	37.1	29.3	23.6	30.7	25.5	22.2	32.1	26.1	21.1	31.2	25.9		29.4	23		47
54	24.5	22.9	21.3	32.9	27.3	22.6	27.7	23.2	20.6	29.3	24	20.8	28.9	24.1	19.7	27.6	22.6		54
61	21.9	20.4	19.8	29.3	25.2	21.8	25	21.2	19.2	26.8	22.1	19.6	26.8	22.3	19.4	25.9	21.2	18.1	61
68	19.6	18.4	18	26.7	23.3	20.7	22.6	19.5	17.9	24.9	20.6	18.5	24.8	20.6	18.4	24.3	20	17.8	68
75	17.5	16.6	15.9	24.4	21.4	19.4	20.7	18	16.8	23	19.2	17.5	23.1	19.3	17.4	22.7	19	16.9	75
82	15.8	15.1	14.1	22.4	19.8	18	18.8	16.7	15.8	21.3	18.1	16.6	21.4	18.2	16.6	21.3	17.9	16.1	82
89	14.4	13.7	12.3	20.6	18.3	16.6	17.3	15.5	14.9	19.7	16.9	15.7	19.8	17.2	15.8	19.9	16.9	15.4	89
96				19.1	17.1	15.4	16	14.5	14.1	18.2	15.9	15	18.6	16.1	15.1	18.5	16.1	14.7	96
103				17.8	16	14.2	14.8	13.7	13.4	16.9	15	14.3	17.4	15.3	14.4	17.4	15.3	14.1	103
110				16.6	14.9	13.3	13.8	12.9	12.8	15.8	14.1	13.7	16.2	14.6	13.9	16.5	14.5	13.6	110
117				15.5	13.9	12.4	13	12.2	12.2	14.9	13.5	13.1	15.3	13.9	13.3	15.5	14	13	117
124				14.6	13.1	11.7	12.2	11.7	11.7	13.9	12.9	12.6	14.6	13.2	12.7	14.6	13.4	12.5	124
131				13.7	12.4	10.9	11.5	11.1	11.2	13.2	12.3	12.1	13.8	12.7	12.3	13.8	12.9	12.1	131
138							11	10.7	10.7	12.6	11.8	11.7	13	12.2	11.8	13	12.4	11.6	138
145							10.4	10.3		12	11.4	11.2	12.5	11.7	11.3	12.2	11.9	11.2	145
152							9.8			11.4	10.9	10.8	12	11.3	10.9	11.4	11.5	10.9	152
159										11	10.6	10.3	11.5	11	10.5	10.7	11	10.5	159
166										10.6	10.3	10	11	10.6	10.2	10.1	10.4	10	166
173										10.2	10.1	9.7	10.6	10.3	9.9	9.4	9.7	9.6	173
180										9.5	7.4		10.2	10.1	9.6	8.8	9.1	9.1	180
187													9.7	9.8		8.2	8.5	8.6	187
194																7.7	7.9	7.9	194
201																7.1	7.4	7.3	201
208																5.3			208

TAB 1555638 / 1555687 / 1555736

View thousands of Crane Specifications on FreeCraneSpecs.com

Lifting capacities on the hydraulically or mechanically variable folding jib with boom extension

Forces de levage à la fléchette pliante à variation hydraulique ou mécanique avec télescope rallongé

↔ ft	177 ft + 23 ft			191 ft + 23 ft			206 ft + 23 ft			221 ft + 23 ft			↔ ft
	40 ft			40 ft			40 ft			40 ft			
	0°	22.5°	45°	0°	22.5°	45°	0°	22.5°	45°	0°	22.5°	45°	
40	20.6			20.2									40
47	26			20.1			15.6			12.6			47
54	24.8	19.6		19.6			15.5			12.6			54
61	23.5	19.3	16.6	18.8	16.7		15	14.1		12.2			61
68	22.2	18.4	16.4	17.9	16.5	14.4	14.4	13.9		11.8	10.9		68
75	21	17.6	15.7	17	15.9	14.2	13.8	13.2	12.5	11.3	10.8		75
82	19.8	16.9	15	16	15.3	13.8	13.1	12.6	12.3	10.8	10.3	9.9	82
89	18.6	16.1	14.5	15.1	14.7	13.3	12.5	12.1	11.9	10.4	9.9	9.7	89
96	17.6	15.4	13.9	14.3	13.9	12.9	11.9	11.5	11.4	9.9	9.5	9.3	96
103	16.5	14.8	13.4	13.6	13.2	12.4	11.3	11	10.9	9.4	9.1	8.9	103
110	15.4	14.2	12.9	12.9	12.6	12	10.8	10.5	10.4	9	8.7	8.6	110
117	14.4	13.6	12.5	12.1	12	11.6	10.3	10	10	8.6	8.4	8.3	117
124	13.4	13	12	11.5	11.4	11.2	9.7	9.6	9.5	8.2	8	7.9	124
131	12.4	12.4	11.6	10.9	10.8	10.8	9.2	9.2	9.2	7.8	7.7	7.6	131
138	11.5	11.8	11.3	10.2	10.3	10.4	8.8	8.7	8.8	7.4	7.3	7.3	138
145	10.8	11.1	10.9	9.6	9.7	9.9	8.4	8.3	8.4	7.1	7	7.1	145
152	10.1	10.4	10.4	9	9.2	9.4	7.9	7.9	8	6.8	6.7	6.8	152
159	9.3	9.8	9.8	8.4	8.7	8.8	7.5	7.6	7.7	6.5	6.4	6.5	159
166	8.7	9.1	9.2	7.9	8.1	8.3	7.1	7.1	7.3	6.1	6.2	6.2	166
173	8.1	8.5	8.6	7.3	7.6	7.8	6.6	6.7	6.9	5.8	5.9	5.9	173
180	7.6	7.9	8	6.8	7.1	7.2	6.2	6.3	6.5	5.5	5.6	5.7	180
187	7	7.4	7.5	6.3	6.6	6.7	5.7	5.9	6.1	5.1	5.3	5.4	187
194	6.5	6.8	6.9	5.9	6.1	6.2	5.3	5.5	5.7	4.8	4.9	5.1	194
201	6	6.3	6.4	5.4	5.6	5.7	4.9	5.1	5.3	4.4	4.6	4.7	201
208	5.6	5.9	5.9	5	5.2	5.2	4.5	4.7	4.8	4.1	4.3	4.4	208
215	5.2	5.4	5.4	4.6	4.7	4.8	4	4.2	4.3	3.7	3.9	4	215
222	4.5	4.7		4.2	4.3	4.3	3.6	3.8	3.9	3.3	3.5	3.6	222
229				3.8	3.9	3.9	3.2	3.4	3.4	2.9	3.1	3.2	229
236				3.2	3.4		2.9	3	3	2.6	2.8	2.8	236
243							2.6	2.7					243

TAB 1555638 / 1555687 / 1555736

View thousands of Crane Specifications on FreeCraneSpecs.com

Lifting capacities on the hydraulically or mechanically variable folding jib with boom extension

Forces de levage à la fléchette pliante à variation hydraulique ou mécanique avec télescope rallongé

↔ ft	43 ft + 23 ft			88 ft + 23 ft			103 ft + 23 ft			132 ft + 23 ft			147 ft + 23 ft			162 ft + 23 ft			↔ ft
	63 ft			63 ft			63 ft			63 ft			63 ft			63 ft			
	0°	22.5°	45°	0°	22.5°	45°	0°	22.5°	45°	0°	22.5°	45°	0°	22.5°	45°	0°	22.5°	45°	
14	41.2																		14
16	41.2																		16
18	40.7																		18
20	40.1			35.1															20
24	38.2			35			29.7												24
28	35.9			34.5			29.6												28
32	33.2			33.5			29.1			26.6			22.9						32
36	30.7			32.3			28.1			26.4			22.8						36
40	28.3	24.1		31	23.1		26.8			25.9			22.7			20.4			40
47	24.3	21.2		28.3	22.8		24.5	17.7		24.2			22.2			20.1			47
54	21.2	18.8	15.6	25.8	20.4		21.9	17.4		22.4	16.6		21.3	16.5		19.5			54
61	18.5	16.9	15.2	23.5	18.8	15.1	19.8	16	13.4	20.7	16.3		20.3	16.1		18.8	15		61
68	16.4	15.2	14	21.2	17.3	14.8	18	14.8	13.1	19.1	15.2	12.8	19	15.1		18	14.7		68
75	14.6	13.8	13	19.3	16	14	16.4	13.8	12.4	17.7	14.3	12.6	17.7	14.3	12.2	16.9	14		75
82	13.2	12.7	12	17.5	14.9	13.3	15	13	11.7	16.4	13.5	12	16.6	13.5	11.9	15.9	13.3	11.5	82
89	12	11.7	11.3	16	13.9	12.6	13.8	12.2	11.1	15.1	12.8	11.4	15.5	12.8	11.4	15	12.6	11.3	89
96	11	10.9	10.6	14.7	13.1	12	12.7	11.5	10.6	14	12.2	10.9	14.4	12.2	11	14.2	12.1	10.9	96
103	10.2	10.1	10	13.6	12.3	11.5	11.8	10.8	10.1	13.2	11.5	10.5	13.5	11.6	10.6	13.4	11.5	10.5	103
110	9.4	9.4	9.6	12.6	11.7	11	11.1	10.3	9.6	12.3	11	10.1	12.8	11.1	10.2	12.7	11.1	10.1	110
117	8.8	8.9		11.8	11.1	10.5	10.3	9.7	9.2	11.5	10.5	9.7	12.1	10.6	9.8	12	10.6	9.8	117
124				11.2	10.5	10.1	9.7	9.2	8.9	10.9	10	9.4	11.4	10.2	9.5	11.5	10.2	9.5	124
131				10.4	10.1	9.8	9.2	8.8	8.5	10.4	9.5	9	10.8	9.8	9.2	11	9.8	9.2	131
138				9.9	9.6	9.5	8.7	8.4	8.2	9.8	9.2	8.7	10.4	9.4	8.9	10.4	9.4	8.9	138
145				9.4	9.2	9.3	8.2	8	8	9.3	8.8	8.5	9.9	9	8.6	10	9.1	8.6	145
152				8.9	8.9		7.8	7.6	7.7	8.9	8.4	8.2	9.4	8.7	8.4	9.6	8.7	8.4	152
159				8.6			7.4	7.3	7.5	8.5	8.1	8	9	8.3	8.1	9.2	8.4	8.2	159
166							7.1	7.1		8.1	7.8	7.8	8.6	8	7.9	8.8	8.2	8	166
173							6.8	6.9		7.7	7.5	7.6	8.3	7.8	7.7	8.4	7.9	7.8	173
180										7.4	7.3	7.5	7.9	7.5	7.6	8	7.6	7.6	180
187										7.1	7.1	7.4	7.6	7.3	7.4	7.5	7.4	7.4	187
194										6.9	6.9		7.4	7.1	7.3	7.1	7.1	7.2	194
201										6.7	4.1		7.1	6.9	7.3	6.7	6.9	7.1	201
208													6.9	6.8		6.3	6.5	6.7	208
215													6.7			5.9	6.1	6.1	215
222																5.4	5.7		222
229																4.7	5.1		229

TAB 1555645 / 1555694 / 1555743

View thousands of Crane Specifications on FreeCraneSpecs.com

Lifting capacities on the hydraulically or mechanically variable folding jib with boom extension

Forces de levage à la fléchette pliante à variation hydraulique ou mécanique avec télescope rallongé

↔ ft	177 ft + 23 ft			191 ft + 23 ft			206 ft + 23 ft			221 ft + 23 ft			↔ ft
	63 ft			63 ft			63 ft			63 ft			
	0°	22.5°	45°	0°	22.5°	45°	0°	22.5°	45°	0°	22.5°	45°	
40	17.5												40
47	17.4			14.4			11.7						47
54	16.9			14.3			11.6			9.2			54
61	16.6			14			11.4			9.1			61
68	16.2	13.7		13.8			11.2			9			68
75	15.7	13.4		13.6	12.3		11			8.8			75
82	15	12.8		13.2	12		10.7	10.2		8.5			82
89	14.2	12.2	10.9	12.7	11.6		10.4	9.9		8.3	7.7		89
96	13.5	11.7	10.6	12.1	11.1	10.1	9.9	9.5		8	7.5		96
103	12.9	11.2	10.2	11.5	10.7	9.9	9.4	9.1	8.4	7.6	7.2	7	103
110	12.3	10.8	9.9	11	10.3	9.6	9	8.7	8.6	7.3	6.9	6.8	110
117	11.7	10.4	9.6	10.5	10	9.3	8.6	8.3	8.3	7	6.6	6.5	117
124	11.2	10	9.3	9.9	9.6	9	8.2	7.9	7.9	6.6	6.3	6.2	124
131	10.7	9.7	9.1	9.4	9.2	8.8	7.8	7.5	7.6	6.3	6.1	6	131
138	10.2	9.3	8.8	8.9	8.8	8.5	7.4	7.2	7.2	6	5.8	5.8	138
145	9.8	9	8.5	8.4	8.4	8.3	7.1	6.9	6.9	5.8	5.6	5.5	145
152	9.3	8.7	8.3	8	8	8	6.7	6.6	6.7	5.5	5.3	5.3	152
159	8.7	8.4	8.1	7.5	7.6	7.8	6.4	6.3	6.4	5.2	5.1	5.1	159
166	8.2	8.1	7.9	7.1	7.3	7.4	6	6	6.1	4.9	4.9	4.9	166
173	7.6	7.7	7.7	6.6	6.9	7.1	5.7	5.7	5.8	4.6	4.7	4.7	173
180	7.1	7.3	7.4	6.2	6.5	6.7	5.3	5.5	5.6	4.3	4.5	4.5	180
187	6.6	6.9	7	5.7	6.1	6.3	4.9	5.2	5.3	4.1	4.2	4.3	187
194	6.1	6.5	6.7	5.3	5.7	5.9	4.5	4.9	5	3.8	4	4.1	194
201	5.7	6	6.2	4.8	5.3	5.5	4.1	4.5	4.7	3.5	3.7	3.9	201
208	5.2	5.6	5.7	4.4	4.8	5	3.8	4.1	4.4	3.2	3.5	3.7	208
215	4.8	5.1	5.2	4	4.4	4.6	3.4	3.8	4	2.9	3.2	3.4	215
222	4.4	4.7	4.7	3.6	4	4.1	3	3.4	3.6	2.6	2.9	3.1	222
229	4.1	4.3	4.3	3.2	3.5	3.6	2.7	3	3.2	2.3	2.6	2.8	229
236	3.6	3.9	3.8	2.9	3.1	3.2	2.3	2.6	2.7		2.3	2.5	236
243				2.5	2.7	2.7							243

TAB 1555645 / 1555694 / 1555743

View thousands of Crane Specifications on FreeCraneSpecs.com

Lifting capacities on the hydraulically or mechanically variable folding jib with boom extension

Forces de levage à la fléchette pliante à variation hydraulique ou mécanique avec télescope rallongé

43 – 221 ft | 23 ft | 72 ft | 360° | 159000 lbs | 85%

ft	43 ft + 23 ft			88 ft + 23 ft			103 ft + 23 ft			132 ft + 23 ft			147 ft + 23 ft			162 ft + 23 ft			ft
	72 ft			72 ft			72 ft			72 ft			72 ft			72 ft			
	0°	22.5°	45°	0°	22.5°	45°	0°	22.5°	45°	0°	22.5°	45°	0°	22.5°	45°	0°	22.5°	45°	
14	27.9																		14
16	28																		16
18	28.1																		18
20	28																		20
24	27.6			23.3															24
28	27.1			23.3			20.6												28
32	26.3			23.3			20.7			19									32
36	25.5			23.2			20.6			19			17.7						36
40	24.2	18.1		23			20.6			19			17.7			16.2			40
47	21.7	18		22.4	17.5		20.2			19			17.7			16.2			47
54	19.3	16.8		21.6	17.3		19.1	15		18.7			17.6			16.2			54
61	17.2	15.5	13.1	20.3	16.4		18.1	14.7		18	14.2		17.3	14		16			61
68	15.3	14.2	12.9	19.1	15.5	12.9	16.7	13.7		17.1	13.9		16.5	13.8		15.7	13		68
75	13.9	13	12.2	17.8	14.5	12.7	15.4	12.8	11.1	16.1	13.2		15.8	13.1		15.1	12.8		75
82	12.5	12	11.4	16.4	13.6	12.2	14.2	12	10.9	15.1	12.4	10.8	15	12.4	10.7	14.4	12.2		82
89	11.4	11.1	10.7	15.1	12.8	11.6	13.2	11.4	10.3	14.1	11.8	10.5	14.2	11.8	10.5	13.8	11.6	10.2	89
96	10.5	10.3	10	14	12.1	11.1	12.3	10.7	9.9	13.2	11.2	10.1	13.4	11.3	10.1	13.1	11.1	10	96
103	9.7	9.6	9.4	13.1	11.4	10.6	11.4	10.1	9.4	12.4	10.7	9.7	12.6	10.7	9.7	12.5	10.6	9.6	103
110	9.1	9	8.9	12.2	10.8	10.1	10.7	9.6	9	11.7	10.2	9.3	11.9	10.3	9.3	11.8	10.2	9.3	110
117	8.4	8.5	8.6	11.4	10.3	9.7	10.1	9.1	8.6	11.1	9.7	9	11.3	9.8	9	11.2	9.8	9	117
124	7.9	8		10.8	9.8	9.3	9.4	8.7	8.3	10.4	9.3	8.6	10.7	9.4	8.7	10.7	9.4	8.7	124
131				10.2	9.3	9	8.9	8.3	8	9.9	8.9	8.3	10.1	9	8.4	10.3	9	8.4	131
138				9.6	8.9	8.8	8.5	7.9	7.7	9.4	8.5	8.1	9.7	8.7	8.2	9.8	8.7	8.2	138
145				9.1	8.6	8.5	8	7.6	7.4	9	8.2	7.8	9.3	8.4	7.9	9.3	8.4	7.9	145
152				8.7	8.3	8.4	7.6	7.2	7.2	8.5	7.9	7.6	8.9	8	7.7	9	8.1	7.7	152
159				8.2	8		7.2	6.9	7	8.2	7.6	7.4	8.4	7.8	7.5	8.6	7.9	7.5	159
166				7.9	7.8		6.9	6.7	6.8	7.8	7.3	7.2	8.1	7.5	7.3	8.3	7.6	7.4	166
173							6.5	6.4		7.4	7	7	7.8	7.2	7.1	7.9	7.4	7.2	173
180							6.3	6.3		7.1	6.8	6.9	7.5	7	7	7.6	7.1	7	180
187										6.9	6.6	6.8	7.2	6.8	6.9	7.3	6.9	6.9	187
194										6.6	6.4	6.7	6.9	6.6	6.7	7	6.7	6.8	194
201										6.4	6.3	4.1	6.6	6.4	6.7	6.7	6.5	6.7	201
208										6.2	6.2		6.4	6.3	6.6	6.3	6.4	6.6	208
215										3.1			6.2	6.2		6	6.2	6.3	215
222													6.1	6.1		5.6	5.8	5.8	222
229																5.2	5.4	5.3	229
236																4.6	5		236

TAB 1555652 / 1555701 / 1555750

View thousands of Crane Specifications on FreeCraneSpecs.com

Lifting capacities on the hydraulically or mechanically variable folding jib with boom extension

Forces de levage à la fléchette pliante à variation hydraulique ou mécanique avec télescope rallongé

↔ ft	177 ft + 23 ft			191 ft + 23 ft			206 ft + 23 ft			221 ft + 23 ft			↔ ft
	72 ft			72 ft			72 ft			72 ft			
	0°	22.5°	45°	0°	22.5°	45°	0°	22.5°	45°	0°	22.5°	45°	
40	14.6												40
47	14.5			12.5									47
54	14.4			12.5			10.2			8.2			54
61	14.3			12.2			10.1			8.1			61
68	14			12			9.9			8			68
75	13.8	12		11.9			9.8			7.9			75
82	13.4	11.7		11.7	10.9		9.7			7.7			82
89	12.9	11.2		11.4	10.6		9.5	9.1		7.6			89
96	12.5	10.8	9.6	11.2	10.2		9.2	9		7.4	7		96
103	12	10.4	9.4	10.9	9.9	9	8.9	8.6		7.2	6.8		103
110	11.5	10	9.1	10.5	9.5	8.8	8.5	8.3	7.8	6.9	6.5		110
117	11	9.6	8.8	10	9.2	8.5	8.2	7.9	7.7	6.6	6.3	6.1	117
124	10.5	9.2	8.6	9.5	8.9	8.3	7.8	7.6	7.5	6.3	6	5.9	124
131	10	8.9	8.3	9	8.6	8.1	7.5	7.2	7.3	6	5.7	5.7	131
138	9.6	8.6	8.1	8.6	8.3	7.9	7.1	6.9	7	5.8	5.5	5.5	138
145	9.3	8.3	7.9	8.2	8	7.7	6.8	6.7	6.7	5.5	5.3	5.3	145
152	8.9	8	7.7	7.8	7.7	7.5	6.4	6.4	6.4	5.2	5.1	5.1	152
159	8.5	7.8	7.5	7.4	7.4	7.3	6.2	6.1	6.2	4.9	4.9	4.9	159
166	8	7.6	7.3	7	7.1	7.2	5.8	5.8	5.9	4.7	4.7	4.7	166
173	7.5	7.3	7.2	6.6	6.8	6.9	5.5	5.5	5.7	4.4	4.5	4.5	173
180	7.1	7	7	6.1	6.5	6.6	5.2	5.3	5.4	4.2	4.3	4.3	180
187	6.6	6.7	6.8	5.7	6.1	6.3	4.9	5.1	5.2	3.9	4.1	4.2	187
194	6.2	6.4	6.6	5.3	5.7	6	4.5	4.8	5	3.7	3.9	4	194
201	5.8	6.1	6.3	4.9	5.3	5.6	4.2	4.5	4.7	3.4	3.7	3.8	201
208	5.4	5.7	6	4.5	4.9	5.2	3.8	4.2	4.4	3.1	3.4	3.6	208
215	4.9	5.3	5.5	4.1	4.5	4.8	3.4	3.9	4.1	2.9	3.2	3.4	215
222	4.5	4.9	5	3.7	4.1	4.4	3.1	3.5	3.7	2.6	2.9	3.2	222
229	4.2	4.5	4.5	3.3	3.7	3.9	2.7	3.2	3.4	2.3	2.7	2.9	229
236	3.8	4.1	4.1	2.9	3.3	3.4	2.4	2.8	3		2.4	2.6	236
243	3.4	3.7		2.6	2.9	2.9		2.4	2.6				243
250					2.6								250

TAB 1555652 / 1555701 / 1555750

View thousands of Crane Specifications on FreeCraneSpecs.com

Lifting heights
Hauteurs de levage

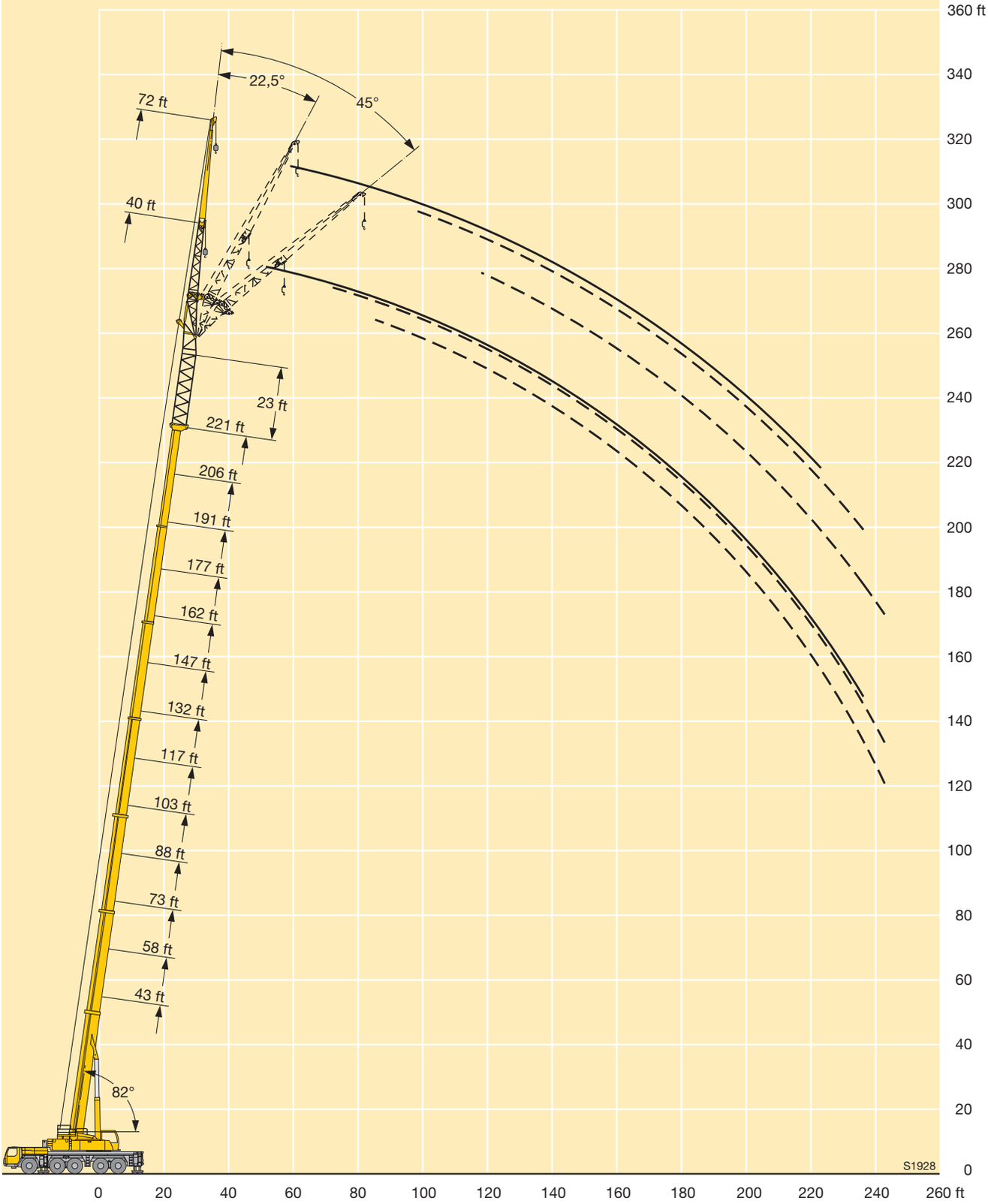

View thousands of Crane Specifications on FreeCraneSpecs.com

Lifting capacities on the hydraulically or mechanically variable folding jib with boom extension

Forces de levage à la fléchette pliante à variation hydraulique ou mécanique avec télescope rallongé

43 – 221 ft | 23 ft | 86 ft | 360° | 159000 lbs | 85%

ft	43 ft + 23 ft			88 ft + 23 ft			103 ft + 23 ft			132 ft + 23 ft			147 ft + 23 ft			162 ft + 23 ft			ft
	86 ft			86 ft			86 ft			86 ft			86 ft			86 ft			
	0°	22.5°	45°	0°	22.5°	45°	0°	22.5°	45°	0°	22.5°	45°	0°	22.5°	45°	0°	22.5°	45°	
18	24.4																		18
20	24.5																		20
24	24.5																		24
28	24.6			21.4															28
32	24.3			21.4			18.4												32
36	23.5			21.3			18.4			16.6									36
40	22.6			21.2			18.2			16.6			15.5			14			40
47	20.6	15.3		20.6			17.9			16.5			15.4			14			47
54	18.3	15		19.6	14.6		17			16.2			15.2			13.8			54
61	16.2	13.8		18.4	14.3		15.7	12.1		15.8			14.9			13.6			61
68	14.4	12.6		17	13.4		14.5	11.8		14.9	11.5		14.5			13.3			68
75	12.8	11.5	9.9	15.5	12.5		13.5	11.1		14	11.2		13.8	10.8		13	10.5		75
82	11.6	10.6	9.7	14.2	11.7	9.7	12.4	10.3		13.2	10.6		13	10.5		12.4	10.3		82
89	10.6	9.7	9.2	13.2	10.9	9.6	11.5	9.7	8.5	12.4	10		12.3	10		11.9	9.8		89
96	9.7	9	8.6	12.2	10.3	9.2	10.7	9.1	8.2	11.5	9.5	8.2	11.6	9.5	8.2	11.4	9.4		96
103	8.9	8.4	8	11.2	9.7	8.7	10	8.6	7.8	10.8	9	8	11	9	8	10.8	8.9	7.8	103
110	8.2	7.7	7.5	10.5	9.1	8.3	9.3	8.1	7.4	10.1	8.5	7.6	10.3	8.6	7.6	10.2	8.5	7.6	110
117	7.5	7.2	7.1	9.8	8.6	8	8.7	7.7	7.1	9.6	8.1	7.3	9.7	8.2	7.3	9.7	8.1	7.3	117
124	7	6.8	6.7	9.2	8.1	7.6	8.2	7.3	6.8	9	7.7	7	9.2	7.8	7.1	9.2	7.8	7	124
131	6.5	6.3	6.5	8.6	7.8	7.3	7.7	6.9	6.5	8.5	7.4	6.8	8.7	7.5	6.8	8.7	7.5	6.8	131
138				8.1	7.4	7	7.2	6.5	6.2	8	7	6.5	8.2	7.1	6.6	8.3	7.2	6.6	138
145				7.7	7	6.8	6.8	6.2	6	7.6	6.7	6.3	7.8	6.8	6.4	7.9	6.9	6.4	145
152				7.2	6.7	6.6	6.4	5.9	5.7	7.2	6.4	6.1	7.5	6.6	6.1	7.5	6.6	6.2	152
159				6.8	6.4	6.4	6	5.7	5.5	6.8	6.2	5.9	7.1	6.3	6	7.2	6.4	6	159
166				6.5	6.2	6.3	5.7	5.4	5.4	6.5	5.9	5.7	6.8	6.1	5.8	6.9	6.1	5.8	166
173				6.2	6		5.4	5.2	5.2	6.2	5.7	5.5	6.4	5.8	5.6	6.6	5.9	5.7	173
180				5.9	5.8		5.1	5	5.1	5.9	5.5	5.4	6.1	5.6	5.5	6.3	5.7	5.5	180
187							4.9	4.8		5.6	5.3	5.3	5.9	5.4	5.3	6	5.5	5.4	187
194							4.7	4.7		5.4	5.1	5.2	5.6	5.2	5.2	5.8	5.3	5.3	194
201										5.1	4.9	5.1	5.4	5.1	5.1	5.6	5.2	5.2	201
208										4.9	4.8	5.1	5.2	4.9	5.1	5.4	5	5.1	208
215										4.7	4.6		5	4.8	5	5.1	4.9	5	215
222										4.6	4.6		4.8	4.6	5	4.9	4.7	4.9	222
229													4.6	4.6		4.6	4.6	4.7	229
236													4.5	4.5		4.2	4.4	4.5	236
243																3.7	4.1		243

TAB 1555659 / 1555708 / 1555757

View thousands of Crane Specifications on FreeCraneSpecs.com

Lifting capacities on the hydraulically or mechanically variable folding jib with boom extension

Forces de levage à la fléchette pliante à variation hydraulique ou mécanique avec télescope rallongé

43 – 221 ft | 23 ft | 86 ft | 360° | 159000 lbs | 85%

ft	177 ft + 23 ft			191 ft + 23 ft		206 ft + 23 ft			221 ft + 23 ft		ft
	86 ft			86 ft		86 ft			86 ft		
	0°	22.5°	45°	0°	22.5°	0°	22.5°	45°	0°	22.5°	
47	12.2			10.3							47
54	12.1			10.3		8.3					54
61	11.9			10.1		8.2					61
68	11.7			9.9		8.1			6.1		68
75	11.4			9.7		7.9			6		75
82	11.2	9.7		9.6		7.8			5.9		82
89	10.9	9.5		9.4	8.8	7.7			5.8		89
96	10.6	9.1		9.3	8.6	7.6	7.2		5.8		96
103	10.3	8.7		9.2	8.2	7.3	7.2		5.7	5.4	103
110	9.8	8.3	7.3	9	7.9	7.1	7.1		5.4	5.2	110
117	9.4	8	7.1	8.8	7.6	6.8	6.8		5.2	5	117
124	9	7.6	6.9	8.4	7.3	6.6	6.5	4.8	4.9	4.7	124
131	8.5	7.3	6.7	8	7.1	6.3	6.2	4.6	4.7	4.5	131
138	8.1	7.1	6.5	7.6	6.8	5.9	5.9	4.5	4.4	4.3	138
145	7.8	6.8	6.3	7.2	6.6	5.6	5.6	4.3	4.2	4.1	145
152	7.5	6.5	6.1	6.8	6.4	5.3	5.3	4.1	4	3.9	152
159	7.2	6.3	5.9	6.4	6.2	5	5.1	3.9	3.7	3.7	159
166	6.8	6.1	5.8	6	5.9	4.7	4.8	3.7	3.5	3.5	166
173	6.5	5.9	5.6	5.7	5.7	4.4	4.6	3.6	3.3	3.3	173
180	6.1	5.7	5.5	5.3	5.5	4.2	4.3	3.4	3.1	3.2	180
187	5.7	5.5	5.4	4.9	5.2	3.9	4.1	3.2	2.9	3	187
194	5.4	5.3	5.2	4.5	5	3.6	3.8	3	2.6	2.8	194
201	5.1	5.1	5.1	4.1	4.7	3.2	3.6	2.8		2.6	201
208	4.7	4.9	5.1	3.7	4.3	2.9	3.3	2.7		2.4	208
215	4.3	4.7	5	3.3	3.9	2.6	3.1	2.5		2.3	215
222	3.9	4.4	4.6	2.9	3.5	2.3	2.8	2.2			222
229	3.5	3.9	4.1	2.6	3.1		2.5				229
236	3.1	3.5	3.7	2.2	2.7		2.2				236
243	2.8	3.1	3.2								243
250	2.4	2.7	2.6								250

TAB 1555659 / 1555708 / 1555757

View thousands of Crane Specifications on FreeCraneSpecs.com

Lifting heights
Hauteurs de levage

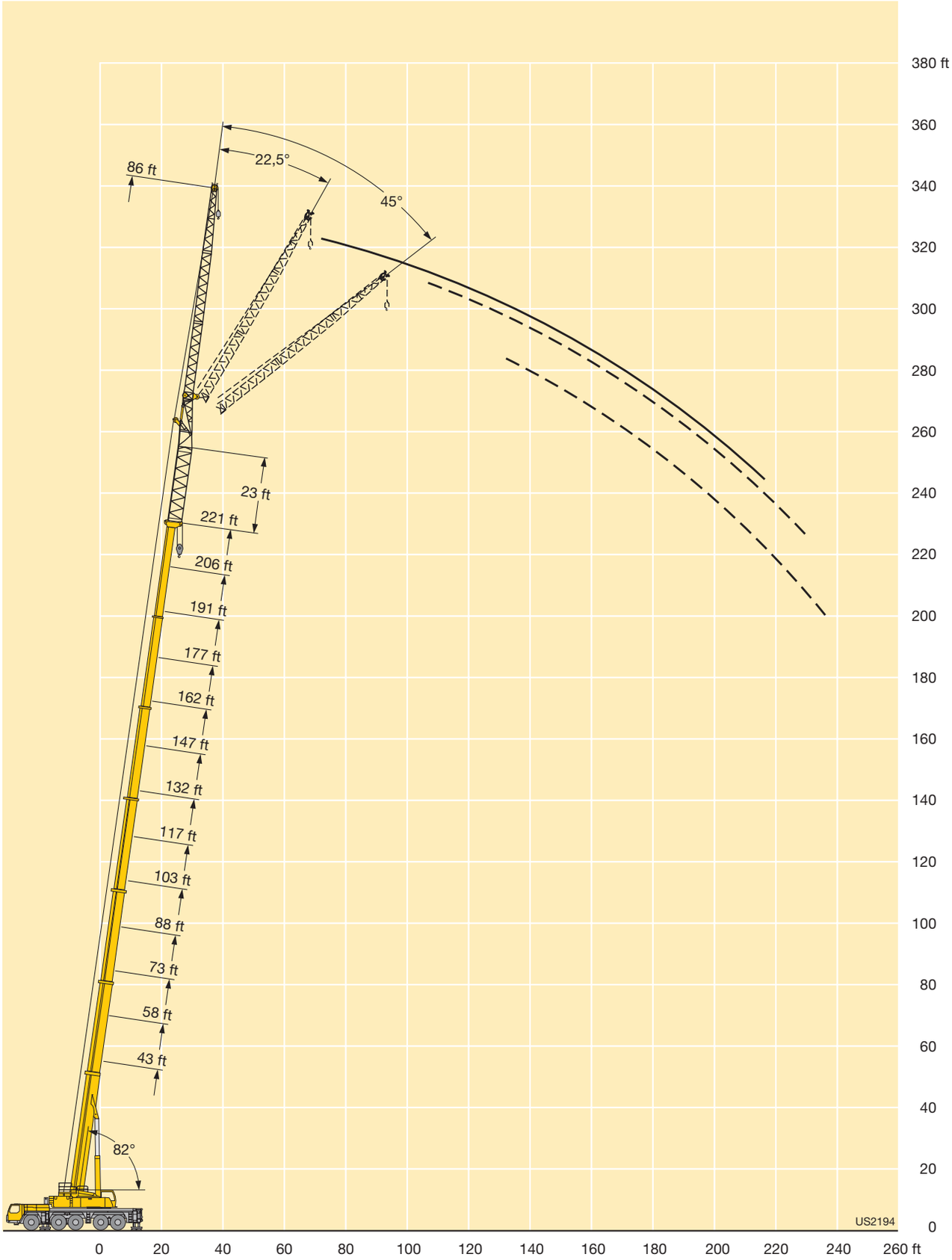

View thousands of Crane Specifications on FreeCraneSpecs.com

Lifting capacities on the hydraulically or mechanically variable folding jib with boom extension

Forces de levage à la fléchette pliante à variation hydraulique ou mécanique avec télescope rallongé

43 – 221 ft | 23 ft | 95 ft | 360° | 159000 lbs | 85%

↔ ft	43 ft + 23 ft			88 ft + 23 ft			103 ft + 23 ft			132 ft + 23 ft			147 ft + 23 ft			162 ft + 23 ft			↔ ft
	95 ft			95 ft			95 ft			95 ft			95 ft			95 ft			
	0°	22.5°	45°	0°	22.5°	45°	0°	22.5°	45°	0°	22.5°	45°	0°	22.5°	45°	0°	22.5°	45°	
20	18.2																		20
24	18.3																		24
28	18.3			16.4															28
32	18.3			16.5			14.7												32
36	18.1			16.5			14.7			13.6									36
40	17.8			16.5			14.7			13.6			12.8			11.9			40
47	17.1			16.4			14.7			13.6			12.8			11.9			47
54	15.9	12.5		16			14.6			13.6			12.8			11.8			54
61	14.7	12.3		15.5	12		14			13.5			12.7			11.7			61
68	13.4	11.6		14.7	11.8		13.4	10.7		13.2			12.6			11.6			68
75	12.2	10.9		13.8	11.3		12.6	10.4		12.7	10.2		12.2			11.4			75
82	11.1	10.1	8.5	13	10.8		11.7	9.8		12.2	9.9		11.9	9.6		11.1	9.4		82
89	10.2	9.4	8.3	12.2	10.2	8.3	10.8	9.2		11.5	9.4		11.4	9.3		10.8	9.2		89
96	9.3	8.7	8	11.4	9.7	8.2	10.1	8.6	7.7	10.9	8.9		10.9	8.9		10.5	8.7		96
103	8.6	8.1	7.7	10.6	9.1	8	9.5	8.2	7.4	10.2	8.4	7.4	10.3	8.5	7.3	10.1	8.3		103
110	7.9	7.5	7.3	9.9	8.6	7.8	8.8	7.7	7	9.6	8	7.2	9.7	8.1	7.1	9.6	8	7	110
117	7.3	7	6.8	9.3	8.1	7.5	8.3	7.3	6.7	9.1	7.6	6.9	9.1	7.7	6.9	9.1	7.6	6.8	117
124	6.8	6.6	6.4	8.7	7.7	7.1	7.8	6.9	6.4	8.5	7.3	6.6	8.7	7.4	6.6	8.6	7.3	6.6	124
131	6.3	6.1	6.1	8.1	7.3	6.8	7.3	6.5	6.1	8	6.9	6.3	8.3	7	6.4	8.2	7	6.3	131
138	5.9	5.8		7.7	7	6.6	6.9	6.2	5.9	7.6	6.6	6.1	7.8	6.7	6.2	7.8	6.7	6.1	138
145	5.5			7.3	6.7	6.4	6.5	5.9	5.6	7.2	6.4	5.9	7.4	6.4	6	7.5	6.5	5.9	145
152				6.9	6.3	6.1	6.1	5.6	5.4	6.9	6.1	5.7	7.1	6.2	5.7	7.2	6.2	5.8	152
159				6.5	6.1	6	5.8	5.4	5.2	6.5	5.8	5.5	6.8	6	5.5	6.8	6	5.6	159
166				6.2	5.8	5.8	5.5	5.1	5.1	6.2	5.6	5.3	6.4	5.7	5.4	6.5	5.8	5.4	166
173				5.9	5.6	5.7	5.2	4.9	4.9	5.9	5.4	5.2	6.1	5.5	5.2	6.2	5.5	5.3	173
180				5.6	5.4		4.9	4.7	4.8	5.6	5.2	5	5.8	5.3	5.1	6	5.3	5.1	180
187				5.3	5.3		4.7	4.5	4.7	5.4	5	4.9	5.6	5.1	5	5.7	5.2	5	187
194				5.2			4.4	4.4		5.1	4.8	4.8	5.4	4.9	4.8	5.5	5	4.9	194
201							4.3	4.2		4.9	4.6	4.7	5.1	4.8	4.7	5.3	4.9	4.8	201
208							4.1			4.7	4.5	4.6	4.9	4.6	4.7	5.1	4.7	4.7	208
215										4.5	4.4	4.6	4.7	4.5	4.6	4.9	4.6	4.6	215
222										4.3	4.2		4.5	4.3	4.6	4.7	4.4	4.6	222
229										4.2	4.2		4.4	4.3	4.6	4.5	4.3	4.5	229
236													4.2	4.2		4.2	4.2	4.4	236
243													4			3.9	4	4.2	243
250																3.6	3.8		250

TAB 1555666 / 1555715 / 1555764

View thousands of Crane Specifications on FreeCraneSpecs.com

Lifting capacities on the hydraulically or mechanically variable folding jib with boom extension

Forces de levage à la fléchette pliante à variation hydraulique ou mécanique avec télescope rallongé

43 – 221 ft | 23 ft | 95 ft | 360° | 159000 lbs | 85%

↔ ft	177 ft + 23 ft			191 ft + 23 ft			206 ft + 23 ft			221 ft + 23 ft	↔ ft
	95 ft			95 ft			95 ft			95 ft	
	0°	22.5°	45°	0°	22.5°	45°	0°	22.5°	45°	0°	
47	10.6										47
54	10.6			9			7.3				54
61	10.4			8.9			7.3				61
68	10.3			8.8			7.2				68
75	10.1			8.6			7.1				75
82	9.9			8.5			7				82
89	9.8	8.7		8.4			6.9			4.8	89
96	9.6	8.4		8.3	7.9		6.8			4.7	96
103	9.5	8.1		8.2	7.7		6.6	5.4		4.6	103
110	9.2	7.8		8.1	7.4		6.5	5.2		4.5	110
117	8.8	7.4	6.6	8	7.1		6.3	5		4.5	117
124	8.5	7.1	6.5	7.8	6.8	6.2	6.1	4.7		4.4	124
131	8.1	6.9	6.3	7.5	6.6	6.1	5.9	4.5	4.3	4.3	131
138	7.7	6.6	6	7.2	6.4	5.9	5.6	4.3	4.2	4.1	138
145	7.3	6.4	5.9	6.9	6.1	5.7	5.4	4	4	3.9	145
152	7.1	6.1	5.7	6.5	6	5.5	5.1	3.8	3.9	3.7	152
159	6.8	5.9	5.5	6.2	5.8	5.4	4.8	3.6	3.7	3.5	159
166	6.5	5.7	5.4	5.9	5.6	5.3	4.5	3.4	3.6	3.3	166
173	6.2	5.5	5.2	5.5	5.4	5.1	4.3	3.3	3.4	3.1	173
180	5.9	5.3	5.1	5.2	5.2	5	4	3.1	3.2	2.9	180
187	5.6	5.2	5	4.9	5	4.9	3.7	2.9	3.1	2.7	187
194	5.3	5	4.9	4.5	4.8	4.8	3.5	2.7	2.9	2.5	194
201	5	4.8	4.7	4.1	4.6	4.6	3.2	2.5	2.7		201
208	4.7	4.7	4.7	3.7	4.3	4.5	2.9	2.4	2.6		208
215	4.3	4.6	4.6	3.4	4	4.3	2.6		2.4		215
222	3.9	4.4	4.5	3	3.6	4	2.3		2.2		222
229	3.6	4.1	4.3	2.7	3.3	3.6					229
236	3.2	3.7	3.9	2.4	2.9	3.2					236
243	2.9	3.3	3.4		2.5	2.8					243
250	2.5	2.9	3								250
257		2.6									257

TAB 1555666 / 1555715 / 1555764

View thousands of Crane Specifications on FreeCraneSpecs.com

Lifting heights
Hauteurs de levage

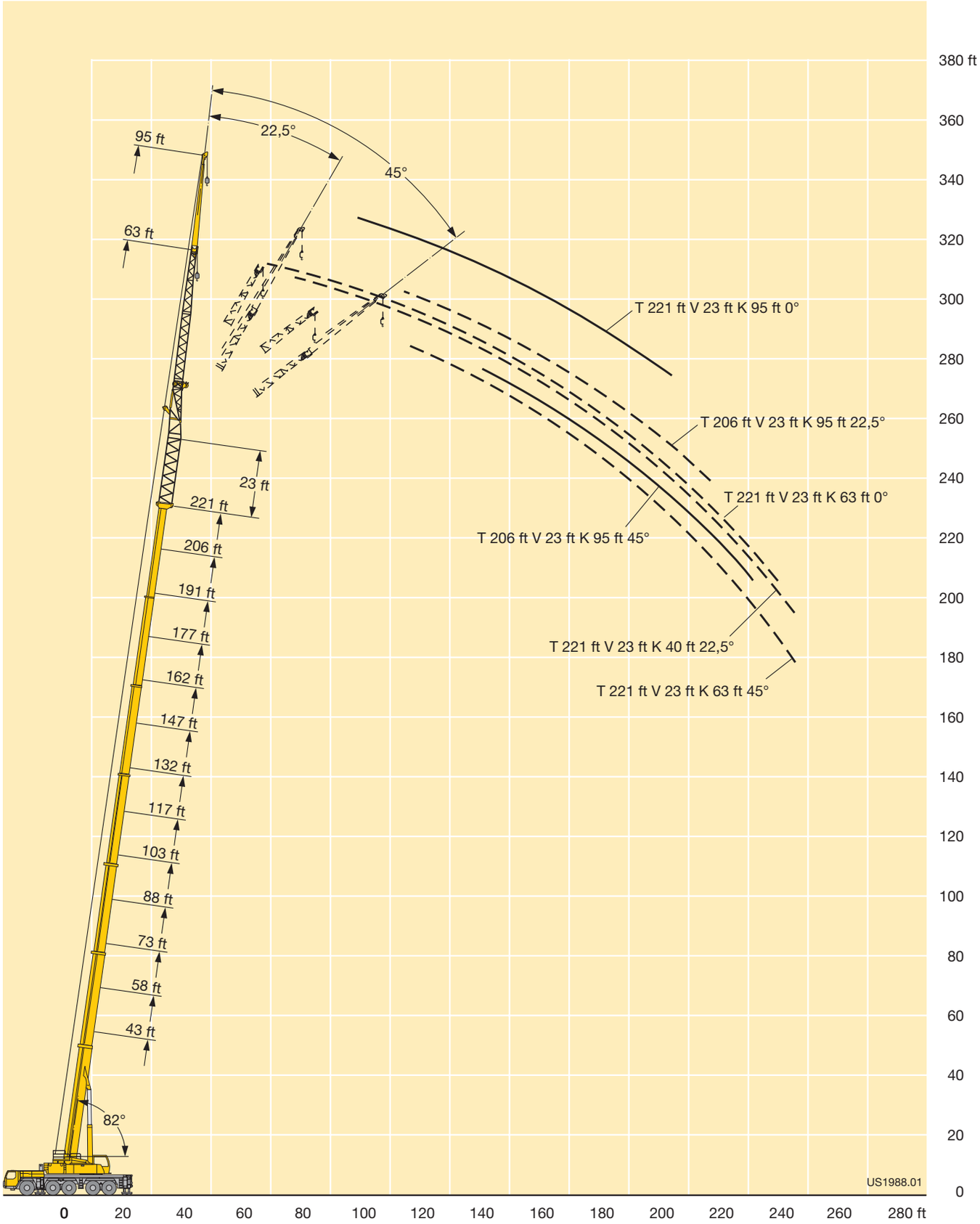

View thousands of Crane Specifications on FreeCraneSpecs.com

Dimensions
Encombrement

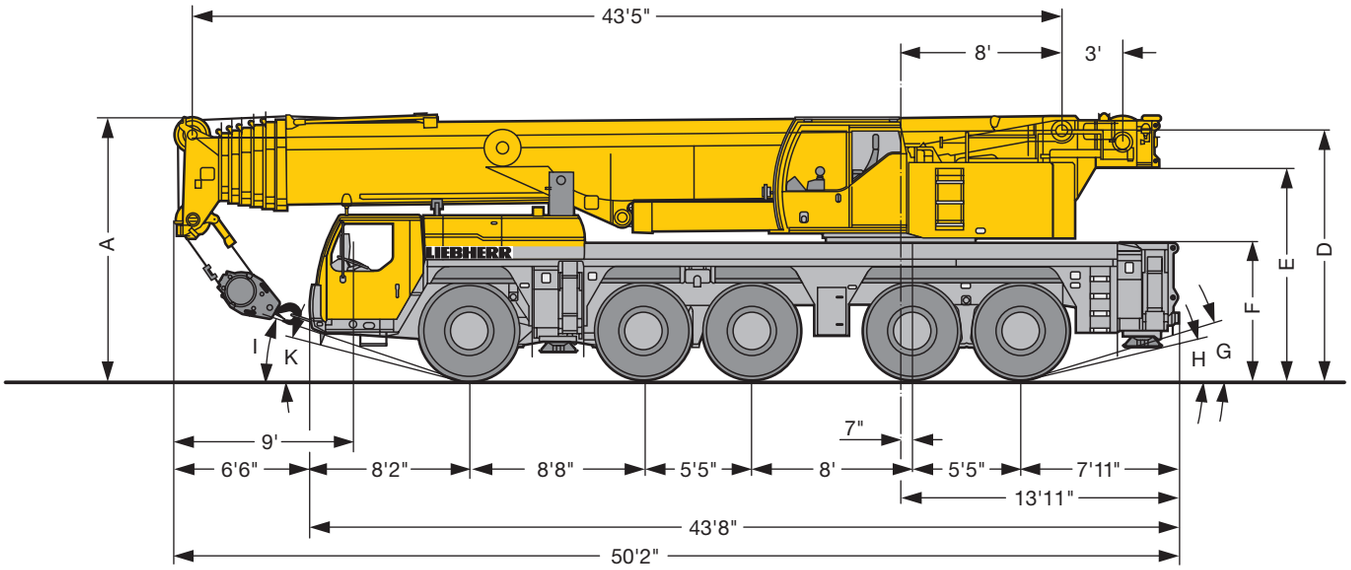

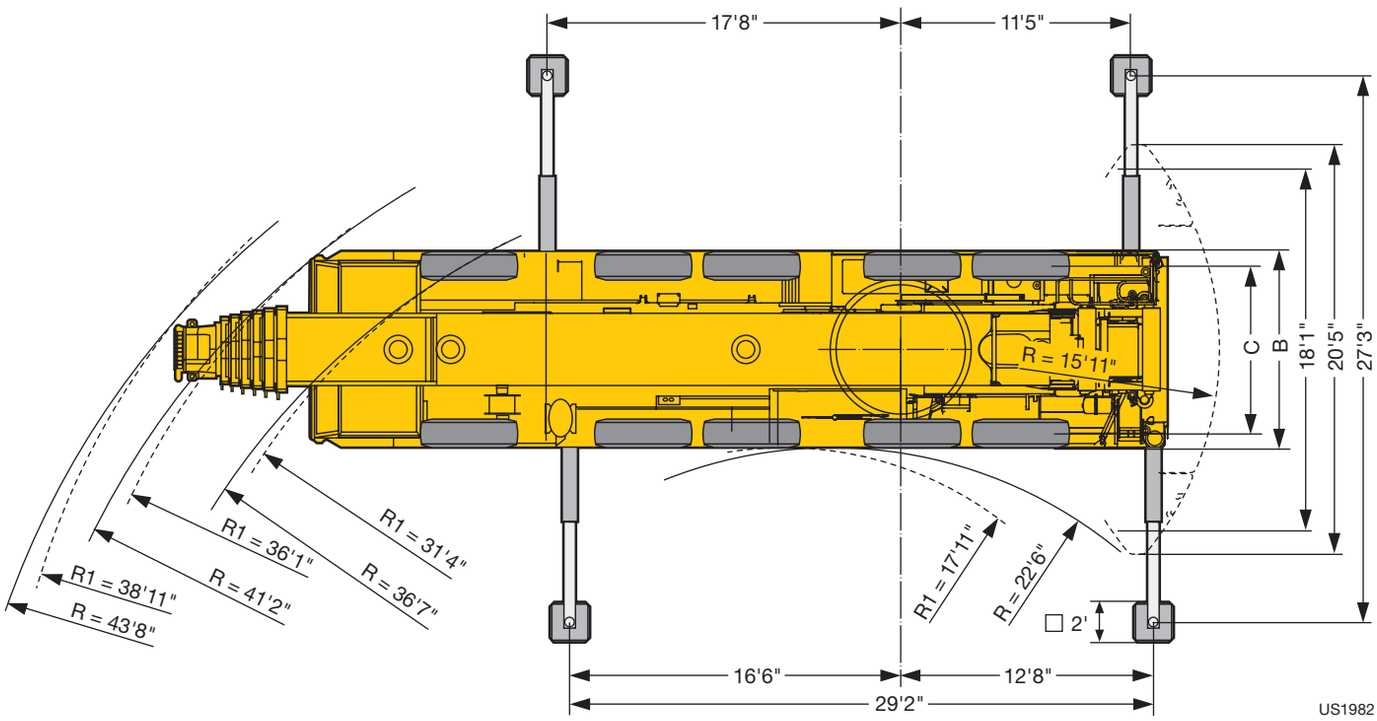

R_1 = All-wheel steering · Direction toutes roues

Dimensions · Encombrement mm											
	A	A 6" *	B	C	D	E	F	G	H	I	K
16.00 R 25	13'1"	12'8"	9'10"	8'4"	12'4"	10'6"	6'9"	17°	14°	20°	16°
20.5 R 25	13'1"	12'8"	10'2"	8'5"	12'4"	10'6"	6'9"	17°	14°	20°	16°

* lowered · abaissé

View thousands of Crane Specifications on FreeCraneSpecs.com

Weights
Poids

Axle Essieu	1	2	3	4	5	Total weight lbs Poids total lbs
lbs	26400	26400	26400	26400	26400	132000

Load (kips) Forces de levage kips	No. of sheaves Poulies	No. of lines Brins	Weight lbs Poids lbs
332.9	9	16	4409
315.3	7	15	3306
238	5	11	2866
156.5	3	7	2292
69	1	3	1851
23.1	–	1	1102

Working speeds
Vitesses

		1	2	3	4	5	6	7	8	9	10	11	12	R 1	R 2	
16.00 R 25 20.5 R 25	mph	3,54	4,54	5,84	7,52	9,51	12,24	16,10	20,63	26,60	34,18	43,37	49,71	3,79	4,91	43 %
		1,55	1,99	2,55	3,29	4,16	5,34	7,02	9,01	11,62	14,85	18,89	24,23	1,68	2,11	55 %

Drive Mécanismes	infinitely variable en continu	Rope diameter / Rope length Diamètre du câble / Longueur du câble	Max. single line pull Effort au brin maxi.
1	0 – 427 ft/min single line ft/min au brin simple	0.8" / 920 ft	23605 lbs
2	0 – 427 ft/min single line ft/min au brin simple	0.8" / 920 ft	23605 lbs
360°	0 – 1.3 rpm		
	approx. 50 seconds to reach 82° boom angle env. 50 s jusqu'à 82°		
	approx. 580 seconds for boom extension from 43 ft – 236 ft env. 580 s pour passer de 43 ft – 236 ft		

View thousands of Crane Specifications on FreeCraneSpecs.com

Equipment
Equipement

Crane carrier

Frame	Self-manufactured, weight-optimized and torsion resistant box-type design of high-tensile structural steel.
Outriggers	4-point supporting system, hydraulically telescopable into horizontal and vertical direction. Automatic levelling of crane. Electronic inclination indicator.
Engine	6-cylinder Diesel, make Liebherr, type D846 A7, watercooled, output 370 kW (503 h.p.) at 1900 min^{-1}, max. torque 1635 lbs-ft at 1200 – 1500 min^{-1}. Exhaust emissions acc. to 97/68/EG stage 3 and EPA/CARB Tier 3. Fuel reservoir: 129 gallons.
Transmission	ZF 12-speed gear box with automatic control system AS-TRONIC. ZF-intarder fitted directly to the gear. Two-stage transfer case with lockable transfer differential.
Axles	Welded design, made of high-tensile fine grained steel. All axles steerable. Axles 2, 4 and 5 are planetary axles with differential locks.
Suspension	All axles are mounted on hydropneumatic suspension – “Niveaumatik suspension” and are lockable hydraulically.
Tyres	10 tyres, size: 16.00 R 25.
Steering	ZF-servocom power steering, dual circuit system with hydraulic servo system and auxiliary pump system, driven by the axle. At road displacement, axles 3, 4 and 5 electrohydraulically speed-dependent and from 18.6 mph, axles 3 and 4 are fixed to straight displacement. From 37.3 mph, axle 5 is fixed straight. Steering according to EG directive 70/311 EWG.
Brakes	Service brake: all-wheel servo-air brake, all axles are equipped with disc brakes, dual circuit. Parking brake: Spring brake actuator, acting on the wheels of the 2nd and 5th axle. Sustained-action brakes: Engine brake as exhaust retarder with Liebherr additional brake system ZBS. Intarder on gear. Brakes acc. to EG directives 71/320 EWG.
Driver’s cab	Spacious, steel made, corrosion resistant cab, cataphoretic dip-primed, on resilient suspension with hydraulic shock absorbers, sound and heat absorbing internal panelling acc. to EG directive, safety glazing, operating and control instruments, comfortably equipped.
Electrical system	Modern data bus technique, 24 Volt DC, 2 batteries of 170 Ah each, lighting acc. to traffic regulations.

Crane superstructure

Frame	Self-manufactured, weight-optimized and torsion resistant welded design of high-tensile structural steel; linked by a triple-row roller slewing rim to the carrier for continuous rotation.
Crane engine	4-cylinder Diesel, make Liebherr, type D934S A6, watercooled, output 145 kW (197 h.p.) at 1800 min^{-1}, max. torque 677 lbs-ft at 1100 min^{-1} – 1500 min^{-1}. Exhaust emissions acc. to 97/68/EG stage 3 and EPA/CARB Tier 3. Fuel reservoir: 66 gallons.
Crane drive	Diesel-hydraulic, with 5 axial piston variable displacement pumps, with servo-control and capacity control, 1 double gear pump. Compact hydraulic drive flanged to the Diesel engine. Drive assembly completely enclosed for noise abatment.
Control	Electronic control by the LICCON computer system (PLC control), 2 selfcentering hand control levers (joy-stick type), with winch and slewing gear signal devices. Infinitely variable crane motions.
Hoist gear	Axial piston variable displacement motor, Liebherr hoist drum with integrated planetary gear and spring-loaded static brake. Actuation by closed regulated oil circuit.
Luffing gear	1 differential ram with nonreturn valve.
Slewing gear	Axial piston fixed displacement motor, planetary gear, spring-loaded static brake.
Crane cab	All-steel construction, entirely galvanized, powder coated, with safety glazing, operating and control instruments, comfortably equipped, cab tiltable backwards.
Safety devices	LICCON safe load indicator, test system, hoist limit switch, safety valves to prevent pipe and hose ruptures.
Telescopic boom	Buckling and torsion resistant design of high-tensile structural steel, oviform boom profile, 1 base section and 6 telescopic sections. All telescopic sections hydraulically extendable independent of one another. Rapid-cycle telescoping system “Telematik”. Boom length: 43 ft – 236 ft.
Counterweight	159000 lbs
Electrical system	Modern data bus technique, 24 Volt DC, 2 batteries of 170 Ah each.

Additional equipment

Swing-away jib	40 ft – 118 ft long, mountable to the telescopic boom at 0°, 22,5° or 45°, integrated erection jib of 18 ft. Hydraulic ram for operating the swing-away jib from 0° – 45° (option).
Telescopic boom extension	23 ft long lattice section, thus 23 ft higher pining point for swing-away jib.
2nd hoist gear	For two-hook operation or for operation with swing-away jib if the hoist rope shall remain reeved.
Tyres	10 tyres, size 20.5 R 25.
Drive 10 x 8	Additional drive of the 1st axle.

Other items of equipment available on request.

View thousands of Crane Specifications on FreeCraneSpecs.com

Equipment
Equipement

Châssis porteur

Cadre	Construction en caisse résistante à la torsion et optimisée en poids réalisée par Liebherr en acier de construction à grain fin très rigide.
Calage	Dispositif de calage horizontal et vertical en 4 points, entièrement déployable hydrauliquement. Nivellement automatique du calage. Indicateurs électroniques d'inclinaison.
Moteur	Moteur diesel, 6 cylindres, fabriqué par Liebherr, de type D846 A7, à refroidissement par eau, de 370 kW (503 ch) à 1900 min^{-1}, couple max. 1635 lbs-ft à 1200 – 1500 min^{-1}. Emissions des gaz d'échappement conformes aux directives 97/68/EG partie 3 et EPA/CARB Tier 3. Capacité du réservoir à carburant: 129 gallons.
Boîte de vitesse	Boîte de vitesses ZF à 12 rapports, mécanisme automatisé à commande AS-TRONIC. Ralentisseur hydrodynamique ZF directement accouplé à la boîte. Boîte de transfert à 2 étages avec blocage de différentiel.
Essieux	Construction soudée en acier haute résistance à grains fins pour l'ensemble des 5 essieux. Tous les essieux sont directeurs. Essieux 2, 4 et 5 planétaires avec blocage du différentiel.
Suspension	Suspension hydropneumatique «Niveaumatik» - sur tous les essieux. Chaque essieu peut être bloqué hydrauliquement.
Pneumatiques	10 pneus de taille: 16.00 R 25.
Direction	Direction hydraulique ZF Servocom, à 2 circuits, assistée hydrauliquement, avec pompe auxiliaire entraînée par essieu. Lors de déplacements sur route, les essieux 3, 4 et 5 sont dirigés électro-hydrauliquement en fonction de la vitesse, et à partir de 18.6 mph, les essieux 3 et 4 sont fixés en marche rectiligne. A partir d'env. 37.3 mph, l'essieu 5 est fixé en marche rectiligne. Direction conforme aux directives européennes 70/311 CE.
Freins	Freins de service: servofrein à air comprimé, tous les essieux sont munis de freins à disque, à 2 circuits. Frein à main: ressort accumulé agissant sur les roues des essieux 2 à 5. Freins continus: frein moteur par clapet sur échappement avec système de ralentissement Liebherr ZBS. Ralentisseur hydrodynamique accouplé à la boîte de vitesses. Freins conformes aux directives européennes 71/320 CE.
Cabine du conducteur	Cabine spacieuse en tôle d'acier traitement anti-corrosion par bain de cataphorèse, avec suspension élastique et amortisseurs hydrauliques, revêtement intérieur avec isolation phonique et thermique selon les directives européennes, glaces de sécurité, appareils de commande et de contrôle, équipement confortable.
Installation électrique	Technique moderne de transmission de données par BUS de données, courant continu 24 Volts, 2 batteries de 170 Ah chacune, éclairage conforme au code de la route.

Partie tournante

Cadre	Construction soudée résistante à la torsion et optimisée en poids réalisée par Liebherr en acier de construction à grain fin très rigide. Couronne d'orientation à rouleaux à 3 rangées permettant une rotation illimitée sert de pièce de liaison avec le châssis de la grue.
Moteur	Moteur diesel Liebherr, 4 cylindres, de type D934S A6, à refroidissement par eau, de 145 kW (197 ch) à 1800 min^{-1}, couple max. 677 lbs-ft à 1100 min^{-1} – 1500 min^{-1}. Emissions des gaz d'échappement conformes aux directives 97/68/EG partie 3 et EPA/CARB Tier 3. Capacité du réservoir à carburant: 66 gallons.
Entraînement de la grue	Diesel hydraulique avec 5 pompes à débit variable à pistons axiaux, servocommande et régulation de la puissance, 1 double pompe à engrenages. Entraînement hydraulique compact, accouplé directement au moteur Diesel, mécanisme d'entraînement total fermé pour une bonne insonorisation.
Commande	Commande électronique par l'ordinateur LICCON (commande SPS). Deux leviers de commande à 4 positions et à autocentrage, avec capteur de rotation des treuils et du mécanisme d'orientation. Commande des mouvements progressive.
Mécanisme de levage	Moteur hydraulique à cylindrée variable, treuil de marque Liebherr avec réducteur planétaire à frein d'arrêt à lamelles intégrées, en circuit hydraulique fermé.
Mécanisme de relevage	1 vérin hydraulique différentiel avec clapets anti-retour de sécurité.
Dispositif de rotation	Moteur à cylindrée constante à pistons axiaux, engrenage planétaire, frein d'arrêt commandé par ressort.
Cabine du grutier	Construction en tôle d'acier entièrement zinguée avec peinture par poudrage et cuisson au four, avec glaces de sécurité, appareils de commande et de contrôle, équipement confortable. Cabine inclinable vers l'arrière.
Dispositif de sécurité	Contrôleur de charge, «LICCON», système test, limitation de la course pour le levage, soupape de sûreté contre la rupture de tubes et de tuyaux.
Flèche télescopique	Flèche télescopique en acier à haute résistance à grains fins, à profil ovale, 1 élément de base et 6 éléments télescopiques. Tous les éléments télescopables indépendamment les uns des autres. Système de télescopage séquentiel rapide, «Telematik». Longueur de flèche: 43 ft – 236 ft.
Contrepoids	159000 lbs
Installation électrique	Technique moderne de transmission de données. Courant continu 24 Volts, 2 batteries de 170 Ah chacune.

Equipement supplémentaire

Fléchette pliante	Longueur: 40 ft – 118 ft, montable sous un angle de 0°, 22,5° ou 45°, fléchette de montage intégrée de 18 ft de long. Vérin hydraulique pour le relevage de la fléchette pliante de 0° à 45° (en option).
Rallonge flèche télescopique	Elément en treillis de 23 ft, de cette manière point d'articulation plus haute de 23 ft pour la flèche pliante.
2ème mécanisme de levage	Pour l'utilisation du deuxième crochet, ou bien pour une utilisation avec fléchette pliante lorsque le câble de levage principal rest mouflé.
Pneumatiques	10 pneus. Taille: 20.5 R 25.
Entraînement 10 x 8	Essieu 1 est entraîné additionnellement.

Autres équipements supplémentaires sur demande.

View thousands of Crane Specifications on FreeCraneSpecs.com

Remarks referring to load charts

1. The tabulated lifting capacities do not exceed 85% of the tipping load.
2. The crane's structural steelwork is in accordance with DIN 15018, part 3. Design and construction of the crane comply with DIN 15018, part 2, and with F. E. M. regulations.
3. The 85% overturning limit values take into account wind force 5 = wind speed 20 mph.
4. Lifting capacities are given in kips.
5. The weight of the hook blocks and hooks must be deducted from the lifting capacities.
6. Working radii are measured from the slewing centreline.
7. The lifting capacities given for the telescopic boom only apply if the folding jib is taken off.
8. Lifting capacities above 295400 lbs / 332900 lbs only with additional pulley block / special equipment.

Remarques relatives aux tableaux des charges

1. Les forces de levage indiquées ne dépassent pas 85% de la charge de basculement.
2. La norme DIN 15018, 3ème partie est appliquée pour les charpentes. La construction de la grue est réalisée conformément à la norme DIN 15018, 2ème partie, et aux règles de la F. E. M.
3. A 85% de la charge de basculement, il a été tenu compte d'un vent de force 5 = vitesse de vent 20 mph.
4. Les forces de levage sont données en kips.
5. Les poids des moufles et crochets doit être soustrait des charges indiquées.
6. Les portées sont calculées à partir de l'axe de rotation.
7. Les forces indiquées pour la flèche télescopique s'entendent fléchette dépliable déposée.
8. Forces de levage plus de 295400 lbs / 332900 lbs seulement avec moufle additionnel / équipement supplémentaire.

View thousands of Crane Specifications on FreeCraneSpecs.com

Liebherr-Werk Ehingen GmbH
Postfach 1361, 89582 Ehingen, Germany
☎ +49 73 91 5 02-0, Fax +49 73 91 5 02-33 99
www.liebherr.com, E-mail: info.lwe@liebherr.com