View thousands of Crane Specifications on FreeCraneSpecs.com

Grove GMK5135

Product Guide

Features

- 110 t (135 USt) capacity
- 12,9 m – 50,8 m (42 ft – 167 ft) 5-section full power boom
- 11 m – 18 m (36 ft – 59 ft) bifold lattice swingaway, hydraulic luffing or manual offset
- 3,6 m (12 ft) 3-sheave heavy duty jib, hydraulic luffing integrated in swingaway
- 40 100 kg (88,400 lb) counterweight with hydraulic removal system
- 380 kW (510 hp) Mercedes OM 502 LA 8 cylinder turbo-charged diesel engine. Daimler Chrysler, 16 speed G240-16 transmission and 2 speed transfer case

View thousands of Crane Specifications on FreeCraneSpecs.com

Features

MEGATRAK™

The MEGATRAK™ suspension system is the best off road driveline available on the market today. The system's versatility and performance allows the GMK5135 to operate as a true all-terrain crane. The MEGATRAK™ independent suspension and all-wheel steer system allows wheels to remain on the ground at all times so stresses and weight are not continually transferred between axles. MEGATRAK™ provides true ground clearance where others just raise the chassis.

Other benefits of the MEGATRAK™ system are:

- A reliable suspension system
- Excellent job site maneuverability with all-wheel steering
- Commonality among almost all models
- A driveline that remains aligned at all times
- A steering linkage system that is protected against damage
- Constant tire contact for equal tire wear
- Reduced maintenance

TWIN-LOCK™

Boom pinning mechanism automatically pins the sections in position using two horizontal pins.

ECOS

Electronic Crane Operating System - ECOS enables control of the entire crane's principle operations. Simple programming eases lift planning and a supply of essential information allows full concentration on the lift itself.

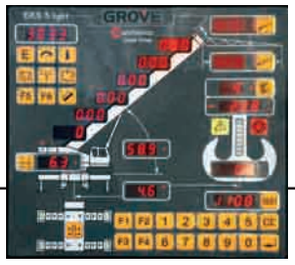

EKS 5 Light

Monitoring the lifting condition of the crane at all times EKS works together with, but independently of the ECOS as a complete command and control system or separately as a load moment indicator.

View thousands of Crane Specifications on FreeCraneSpecs.com

Contents

Specif cations	4
Dimensions	7
Weight proposals	8
Counterweight dimensions	9
Working range (main boom)	10
Load charts (main boom)	11
Working range (swingaway and extensions)	13
Load charts (swingaway and extensions)	14
Working range (integrated heavy duty jib)	16
Load charts (integrated heavy duty jib)	17

View thousands of Crane Specifications on FreeCraneSpecs.com

Specifications

Superstructure

Boom

12,9 m – 50,8 m (42 ft – 167 ft) five section, full power MEGAFORM™ boom with patented TWIN-LOCK™ boom pinning system. Maximum tip height: 54 m (177 ft).

Boom nose

Eight nylatron sheaves, mounted on heavy duty tapered roller bearings with removable pin-type rope guards. Quick reeve boom nose. Removable auxiliary boom nose with removable pin type rope guard.

Boom elevation

Single lift cylinder with safety valve provides boom angle from -3° to +83°.

Hydraulic of settable lattice extension

11 m – 18 m (36 ft – 59 ft) bifold lattice swingaway extension **hydraulically offsettable** and luffing under load: 0° - 40°. Controlled from the crane cab.

Maximum tip height: 72 m (236 ft).

*Of settable lattice extension

11 m – 18 m (36 ft – 59 ft) bifold lattice swingaway extension manually offset: 0°, 20° or 40°.

Maximum tip height: 72 m (236 ft).

Lattice extension inserts

(1) 8 m (26 ft) and (2) 6 m (20 ft) inserts* for use with lattice swingaway extension. Increases extension length to 26 m (85 ft), 32 m (105 ft) or 38 m (125 ft).

Load moment and anti-two block system

Load moment and anti-two block system with audio/visual warning and control lever lockout provides electronic display of boom angle, length, radius, tip height, relative load moment, maximum permissible load, load indication and warning of impending two-block condition.

Cab

All aluminum construction cab with acoustical lining, tinted safety glass, adjustable operator's seat, opening windows in side and cab rear, hinged front window with wiper, sunvisor and window shade. Other features include hot water heater, armrest integrated crane controls, and ergonomically arranged instrumentation.

Crane control system

Full electronic control of all crane movements using electrical control levers with automatic reset to zero. Controls are integrated with the LMI and engine management system by CAN-BUS. ECOS system with semi-graphic display.

Swing

Two planetary gears with axial piston motors. Infinitely variable to 1.5 rpm. Holding and service brake.

Counterweight

40 100 kg (88,400 lb) consisting of various sections with hydraulic installation/removal system. Controlled from the superstructure cab.

Engine

Mercedes-Benz OM 904 LA diesel, 4 cylinders, water cooled, turbocharged with 129 kW (173 bhp) @ 2200 rpm.

Max torque: 675 Nm (498 ft-lb) at 1200 rpm.

Engine emission: EUROMOT/EPA/CARB (off road).

Hydraulic system

2 separate circuits, 1 axial piston variable displacement pump (load sensing) with electronic power limiting control and 1 gear pump for swing.

Dual thermostatically controlled oil coolers keep oil at optimum operating temperature.

Tank capacity: 740 L (195 gal).

Denotes optional equipment

View thousands of Crane Specifications on FreeCraneSpecs.com

Specifications

Superstructure, continued

Hoist

Main and auxiliary hoists are powered by axial piston motor with planetary gear and brake. "Thumb-thumper" hoist drum rotation indicator alerts operator of hoist movement.

	Main	Auxiliary
Line length:	255 m (837 ft)	225 m (738 ft)
Rope diameter:	19 mm	19 mm
Line speed:	125 m/min (410 fpm)	125 m/min (410 fpm)
Line pull:	70 kN (15,700 lb)	70 kN (15,700 lb)

Electrical system

24V system with three phase alternator, 28V/80A. 2 batteries, 12V/170 Ah.

*Optional equipment

- 3,6 m (11.8 ft) side-stowed 3-sheave heavy-duty jib integrated in swingaway
- Work light, mounted on top of base section
- Cab controlled work lights mounted to top of base section
- Stainless steel exhaust system with spark arrestor in lieu of standard
- Engine independent diesel cab heater, also serves as engine preheater including 24-hour timer
- Engine independent propane gas cab heater.
- Stereo/radio CD player
- Outrigger pad load indicator with readout both in superstructure cab and carrier
- Air conditioning
- Working range limiter
- Boom mounted aircraft warning light
- Drive and steer control for superstructure EKS5 with full graphic display
- 2nd 6 m (20 ft) insert for maximum extension length of 38 m (125 ft)

Carrier

Chassis

Box type, torsion resistant frame is fabricated from high strength steel.

Outrigger system

Four hydraulic single stage outrigger beams with vertical cylinders and outrigger pads, 600 mm (23.6 in) square. Outriggers can be set in 3 positions:

Full	- 7,5 m (24.6 ft)
Partial	- 6,7 m (22.0 ft)
	- 5,9 m (19.4 ft)
	- 5,1 m (16.8 ft)
Retracted	- 2,5 m (8.2 ft)

Independent horizontal and vertical movement controlled from each side of carrier. Electronic crane level indicators.

Engine

Mercedes-Benz OM 502 LA eight cylinder, water cooled, turbo-charged, with 380 kW (510 bhp) @ 1800 rpm. Max torque 2400 Nm (1770 ft-lb) @ 1200 rpm.

Engine emissions: EUROMOT/EPA/CARB (off road)

Compression and exhaust brakes.

Fuel tank capacity

400 L (106 gal).

Transmission

Daimler Chrysler, 16 speed G240-16 with EPS (Electric Pneumatic Shifting) and 2 stage transfer case.

Drive/steer

10x6x10

*Denotes optional equipment

View thousands of Crane Specifications on FreeCraneSpecs.com

Specifications

Carrier - continued

Axles

1st axle line – steer

2nd axle line – steer (additional drive)

3rd axle line – drive/steer (disconnects for highway travel 10x8x10 drive only)

4th axle line – drive/steer (connects for all wheel steer)

5th axle line – drive/steer

Drive axles with planetary hub reduction and center mounted differential-gearing. Inter-axle and cross axle differential locks.

Suspension

Exclusive MEGATRAK™ suspension. Independent hydro-pneumatic system acting on all wheels with hydraulic lockout. Suspension can be raised 170 mm (6.7 in) or lowered 130 mm (5.1 in) both longitudinally and transversely. Features an automatic leveling system for highway travel.

Tires

10 tires, 16.00R25

Steering

Dual circuit, hydraulic power assisted steering system. Transfer case mounted, ground driven emergency steering pump. Axles 1, 2, 3 and 5 steer on highway. Separate steering of the 4th and 5th axles for all wheel and crab steering, controlled by an electronic rocker switch.

Brakes

Service brakes: pneumatic dual circuit acting on all wheels, anti lock prevention.

Parking brake: pneumatically operated spring loaded brake acting on axle lines 2 and 5.

Air dryer.

Cab

Two-man design with the following features: safety glass, driver seat with suspension, power windows, heated rear view mirrors, complete instrumentation and driving controls. Air conditioning and engine independent diesel air heater included with 24 hour timer.

ECOS control of suspension, drive connect and disconnect, inter-axle locks, differential locks and all-wheel steer.

Electrical system

24V system with three phase alternator, 28V/100A

2 batteries, 12V/170 Ah

Maximum speed

85 km/h (53 mph)

Gradeability (theoretical)

71% - 14.00 tires

64% - 16.00/20.5 tires

Miscellaneous standard equipment

Work lights; tool kit; fire extinguisher; auxiliary boom nose; radio/CD player in carrier cab, heated rear view mirrors, cruise control and wind speed indicator.

*Optional equipment

- Stainless steel exhaust system with spark arrestor
- 14.00 R25 tires
- 20.5 R25 tires (vehicle width 3,1 m [10.2 ft])
- 10x8x10 drive/steer
- Electric driveline retarder
- Steel outrigger floats
- Spare tire with carry bracket
- Outrigger pad load indicator
- Hinged bunk bed
- Trailer and towing hitches
- Additional strobe lights
- Rear mounted stowage box

**Denotes optional equipment*

View thousands of Crane Specifications on FreeCraneSpecs.com

Dimensions

Dimensions

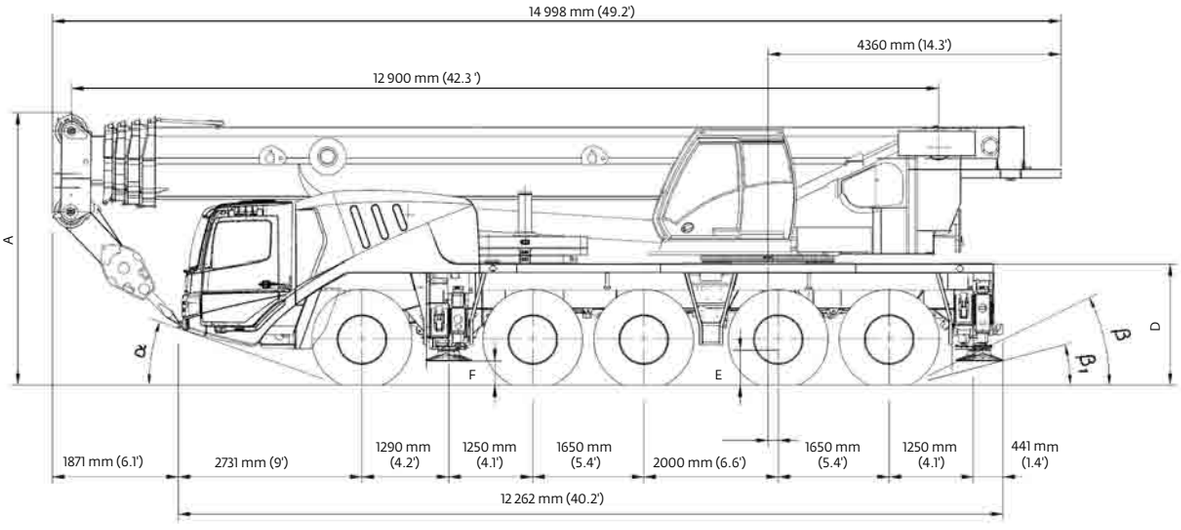

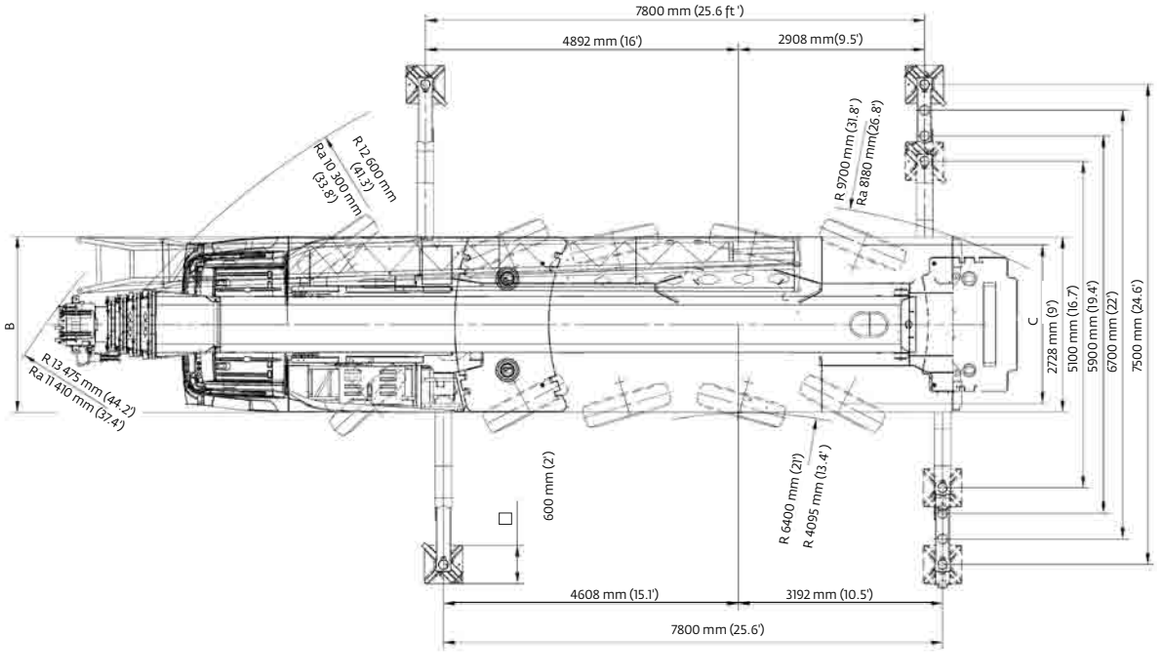

Tires	A	A *130 mm (0.4')	B	C	D	E	F	α	β	β 1
14.00 R25	3948 mm (13')	3818 mm (12.5')	2750 mm (9')	2338 mm (7.7')	1748 mm (5.7')	435 mm (1.4')	356 mm (1.2')	18°	23°	17°
16.00 R25	3998 mm (13.1')	3868 mm (12.7')	3000 mm (9.8')	2286 mm (7.5')	1798 mm (5.9')	485 mm (1.6')	386 mm (1.3')	20°	25°	19°
20.5 R25	3998 mm (13.1')	3868 mm (12.7')	3000 mm (9.8')	2507 mm (8.2')	1798 mm (5.9')	485 mm (1.6')	386 mm (1.3')	20°	25°	19°

Ra = Radius all wheels steered
*Lowered

View thousands of Crane Specifications on FreeCraneSpecs.com

Weights

Trailing boom

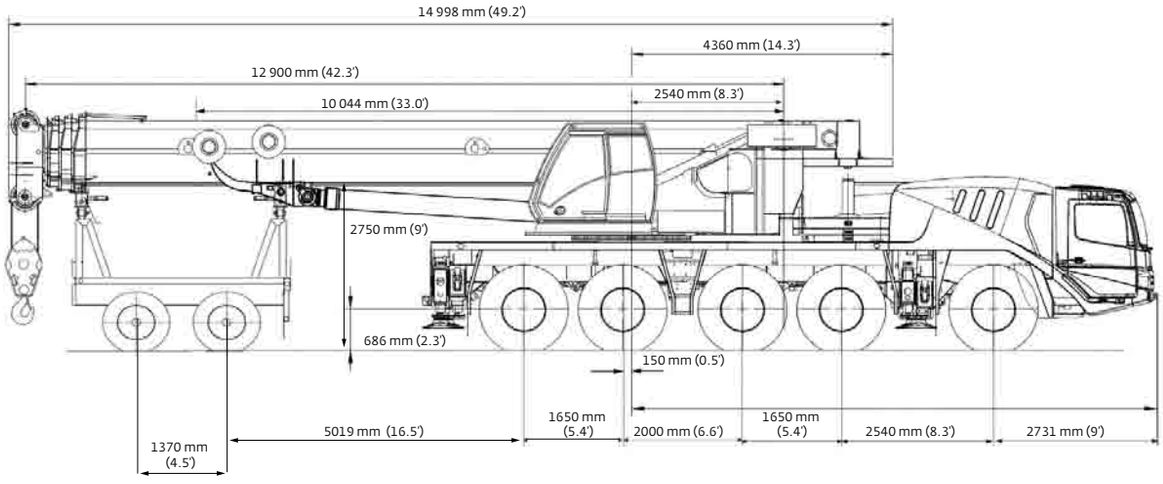

Basic weights - kg (lb)	Axles 1 and 2		Axles 3 - 5		2 Dolly axles		Total	
GMK 5135 Mercedes power with: 16.00R25 tires, 10x8x10 drive/steer, 36 ft – 59 ft hydraulic luffing swingaway, 2nd oil cooler, outrigger pads, auxiliary hoist, driver and tanks f lled, 2 axle boom dolly (2590 kg [5710 lb])	18 308	(40,362)	21 402	(47,182)	13 211	(29,125)	52 921	(116,669)
Additions:								
2500 kg (5500 lb) section pinned to superstructure (5,7)	1896	(4180)	604	(1331)	—	—	2500	(5512)
2500 kg (5500 lb) section pinned to superstructure (1,2)	1798	(3963)	572	(1262)	—	—	2370	(5225)
5000 kg (11,000 lb) section stowed on carrier (3,4)	3792	(8361)	1208	(2662)	—	—	5000	(11,023)
3750 kg (8300 lb) section stowed on carrier (8,9)	2852	(6287)	908	(2002)	—	—	3760	(8289)
Removals:								
Brackets for hydraulic swingaway	-13	(-30)	-12	(-26)	-61	(-134)	86	(190)
Hose reel + parts for hydraulic swingaway	-7	(-16)	-6	(-14)	-196	(-433)	210	(463)
11 m – 18 m (36 ft – 59 ft) hydraulic swingaway	-197	(-434)	-171	(-376)	-1376	(-3034)	1744	(3845)
Front outriggers	-1354	(-2986)	-6	(-12)	—	—	-1360	(-2998)
Rear outriggers	911	(2008)	-2361	(-5205)	—	—	-1450	(-3197)
Front and rear outrigger f oats	-37	(-81)	-163	(-360)	—	—	-200	(-441)
Substitutions:								
10x6x10 drive/steer	-44	(-97)	-66	(-145)	—	—	110	(243)
14.00R25 tires	-240	(-529)	-360	(-794)	—	—	-600	(-1323)
20.5R25 tires	172	(379)	258	(569)	—	—	430	(948)

Boom over front

Basic weights - kg (lb)	Axles 1 and 2		Axles 3 - 5		Total	
GMK 5135 Mercedes power with: 16.00R25 tires, 10x6x10 drive/steer, 2nd oil cooler, outrigger pads, auxiliary hoist, driver and tanks f lled	19 243	(42,423)	29 052	(64,049)	48 295	(106,472)
Additions:						
10x8x10 drive/steer	44	(97)	66	(145)	110	(243)
Electric driveline retarder	-74	(-163)	334	(736)	260	(573)
Spare wheel 14.00 R25 XGC steel rim with stowage	-200	(-442)	459	(1013)	259	(571)
Spare wheel 16.00 R25 XGC steel rim with stowage	-250	(-552)	569	(1255)	319	(703)
Spare wheel 20.5 R25 XGC steel rim with stowage	-288	(-634)	650	(1432)	362	(798)
Brackets for hydraulic swingaway	82	(182)	4	(8)	86	(190)
Hose reel + parts for hydraulic swingaway	301	(664)	-91	(-201)	210	(463)
11 m – 18 m (36 ft – 59 ft) hydraulic swingaway	1968	(4338)	-493	(-242)	1744	(3845)
Auxiliary boom nose	149	(329)	-79	(-174)	70	(154)
2500 kg (5500 lb) section pinned to superstructure (5,7)	-1862	(-4105)	4362	(9616)	2500	(5512)
2500 kg (5500 lb) section stowed on carrier (1,2)	1798	(3963)	572	(1262)	2370	(5225)
5000 kg (11,000 lb) section stowed on carrier (3,4)	3792	(8361)	1208	(2662)	5000	(11,023)
3750 kg (8300 lb) section stowed on carrier (8,9)	2852	(6287)	908	(2002)	3760	(8289)
Substitutions:						
14.00R25 tires	-240	(-529)	-360	(-794)	-600	(-1323)
20.5R25 tires	172	(379)	258	(569)	430	(948)
Removals:						
Boom assembly	-11 277	(-24,862)	-3844	(-8475)	-15 121	(-33,336)
Front outriggers	-1354	(-2986)	-6	(-12)	-1360	(-2998)
Rear outriggers	911	(2008)	-2361	(-5205)	-1450	(-3197)
Front and rear outrigger f oats	-37	(-81)	-163	(-360)	-200	(-441)

View thousands of Crane Specifications on FreeCraneSpecs.com

Counterweight

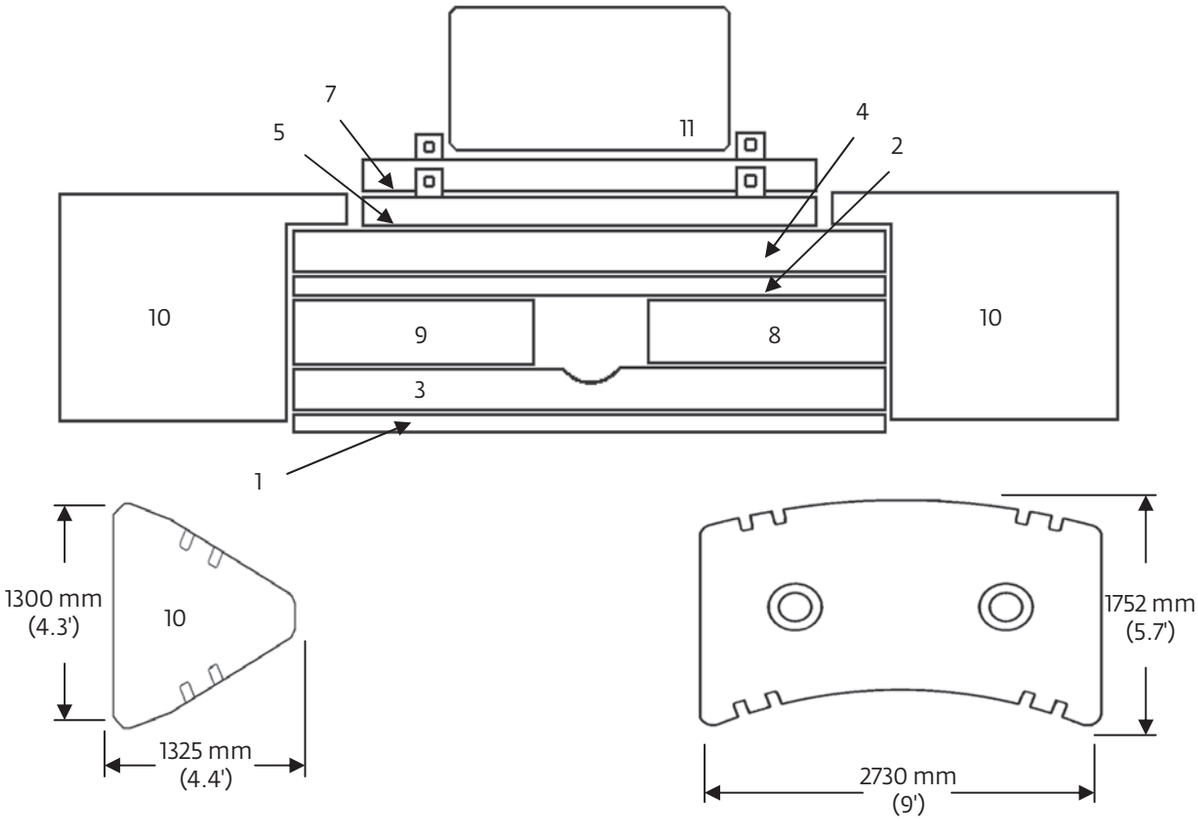

1. 2500 kg (5500 lb) baseplate
2. 2500 kg (5500 lb) stacking
3. 5000 kg (11,000 lb) stacking
4. 5000 kg (11,000 lb) stacking
5. 2500 kg (5500 lb) pinned
7. 2500 kg (5500 lb) pinned
8. 3750 kg (8300 lb) stacking
9. 3750 kg (8300 lb) stacking
10. 5770 kg (12,700 lb) wing
11. 1000 kg (2200 lb) bolted (auxiliary hoist or IPO)

	1	2	3	4	5	7	8	9	10	11
Counterweight conf guration kg (lb)										
1000 (2200)										●
3500 (7700)						●				●
6000 (13,200)					●	●				●
8500 (18,700)	●				●	●				●
11 000 (24,200)	●						●	●		●
13 500 (29,700)	●					●	●	●		●
16 000 (35,200)	●				●	●	●	●		●
18 500 (40,700)	●		●			●	●	●		●
21 000 (46,200)	●		●		●	●	●	●		●
23 500 (51,800)	●	●	●		●	●	●	●		●
26 000 (57,300)	●		●	●	●	●	●	●		●
28 500 (62,800)	●	●	●	●	●	●	●	●		●
40 100 (88,400)	●	●	●	●	●	●	●	●	2x	●

View thousands of Crane Specifications on FreeCraneSpecs.com

Working range

42 ft – 167 ft main boom

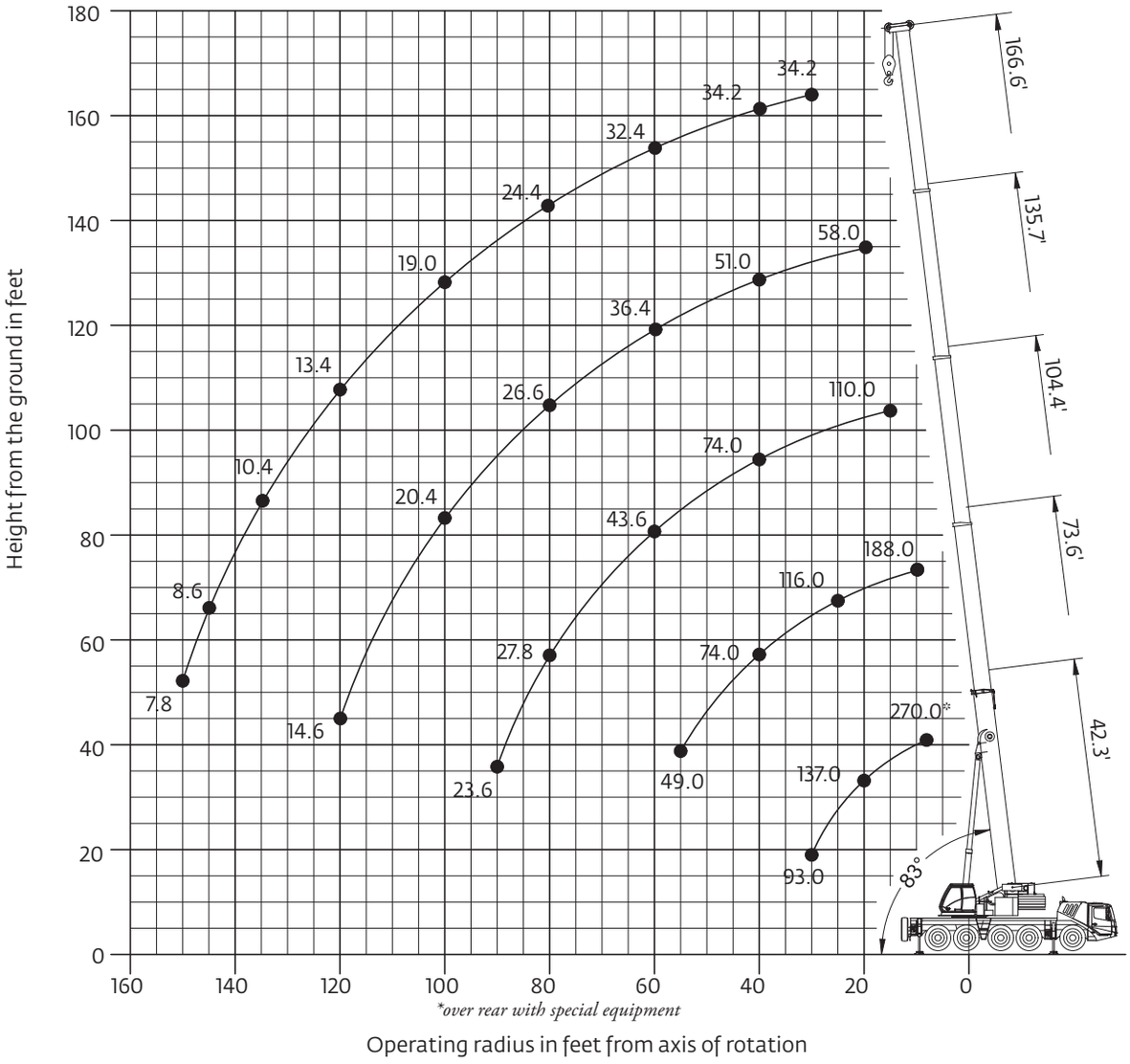

Hook heights shown in the working range diagram do not consider loaded boom deflection.

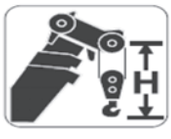

Hook block	H
100 USt, 7 sheave	3160 mm (10.4 ft)
80 USt, 5 sheave	3070 mm (10.1 ft)
45 USt, 3 sheave	3000 mm (9.8 ft)
20 USt, 1 sheave	2770 mm (9.1 ft)
12 USt, single line headache ball	2350 mm (7.7 ft)

THIS CHART IS ONLY A GUIDE AND SHOULD NOT BE USED TO OPERATE THE CRANE.
The individual crane's load chart, operating instructions and other instructional plates must be read and understood prior to operating the crane.

View thousands of Crane Specifications on FreeCraneSpecs.com

Load charts
Main boom

12,9 m – 50,8 m (42.3 ft – 166.6 ft) | 25.6 ft x 24.6 ft 100% | 40 100 kg (88,400 lb) | 360°

Pounds x 1000

Feet	42.3	58.0	73.6	89.1	104.4	120.2	135.7	151.2	166.6
8.0	270.0*	—	—	—	—	—	—	—	—
10.0	216.0	199.0	188.0	143.0	—	—	—	—	—
15.0	170.0	167.0	156.0	143.0	110.0	—	—	—	—
20.0	137.0	139.0	134.0	127.0	110.0	79.0	58.0	—	—
25.0	114.0	116.0	116.0	112.0	100.0	77.0	58.0	44.0	—
30.0	93.0	98.0	98.0	97.0	91.0	70.0	58.0	44.0	34.2
35.0	—	85.0	85.0	84.0	84.0	63.0	56.0	44.0	34.2
40.0	—	74.0	74.0	73.0	74.0	57.0	51.0	44.0	34.2
45.0	—	61.0	65.0	64.0	64.0	52.0	47.0	42.8	34.2
50.0	—	—	57.0	58.0	56.0	47.0	43.0	39.6	34.2
55.0	—	—	49.0	51.0	49.0	43.4	39.6	36.8	34.2
60.0	—	—	—	45.0	43.6	39.8	36.4	34.2	32.4
65.0	—	—	—	40.0	38.8	36.6	33.8	31.2	30.0
70.0	—	—	—	35.8	34.6	33.0	31.0	29.0	28.0
75.0	—	—	—	32.2	31.0	30.8	28.6	27.0	26.2
80.0	—	—	—	—	27.8	29.2	26.6	25.2	24.4
85.0	—	—	—	—	25.0	26.6	24.2	23.6	23.0
90.0	—	—	—	—	23.6	24.0	22.4	22.4	21.6
95.0	—	—	—	—	—	22.0	21.4	21.2	20.4
100.0	—	—	—	—	—	20.0	20.4	20.0	19.0
105.0	—	—	—	—	—	—	18.8	18.6	17.6
110.0	—	—	—	—	—	—	17.2	17.2	16.2
115.0	—	—	—	—	—	—	15.8	15.8	14.8
120.0	—	—	—	—	—	—	14.6	14.4	13.4
125.0	—	—	—	—	—	—	—	13.4	12.4
130.0	—	—	—	—	—	—	—	12.2	11.2
135.0	—	—	—	—	—	—	—	11.4	10.4
140.0	—	—	—	—	—	—	—	—	9.4
145.0	—	—	—	—	—	—	—	—	8.6
150.0	—	—	—	—	—	—	—	—	7.8

**over rear with special equipment*

12,9 m – 50,8 m (42.3 ft – 166.6 ft) | 25.6 ft x 24.6 ft 100% | 21 000 kg (46,200 lb) | 360°

Pounds x 1000

Feet	42.3	58.0	73.6	89.1	104.4	120.2	135.7	151.2	166.6
10.0	212.0	199.0	188.0	143.0	—	—	—	—	—
15.0	165.0	166.0	156.0	143.0	110.0	—	—	—	—
20.0	131.0	133.0	133.0	126.0	110.0	79.0	58.0	—	—
25.0	108.0	110.0	102.0	94.0	91.0	77.0	58.0	44.0	—
30.0	86.0	85.0	79.0	78.0	72.0	67.0	58.0	44.0	34.2
35.0	—	70.0	67.0	64.0	59.0	55.0	53.0	44.0	34.2
40.0	—	56.0	56.0	53.0	50.0	49.0	45.0	44.0	34.2
45.0	—	46.0	48.0	45.0	42.2	42.4	39.8	40.0	34.2
50.0	—	—	40.4	39.4	39.0	36.8	36.2	35.0	32.6
55.0	—	—	34.6	34.4	34.6	32.2	32.4	30.8	28.6
60.0	—	—	—	29.8	30.8	28.4	28.6	27.2	25.2
65.0	—	—	—	27.0	27.4	26.2	25.6	24.2	22.4
70.0	—	—	—	24.8	24.2	24.4	23.0	21.6	20.0
75.0	—	—	—	22.0	21.4	22.0	20.6	19.4	17.8
80.0	—	—	—	—	19.6	19.6	18.6	17.4	15.8
85.0	—	—	—	—	17.6	17.6	16.8	15.8	14.2
90.0	—	—	—	—	15.6	15.8	15.0	14.2	12.8
95.0	—	—	—	—	—	14.2	13.6	12.8	11.4
100.0	—	—	—	—	—	12.8	12.2	11.6	10.2
105.0	—	—	—	—	—	—	10.8	10.2	9.0
110.0	—	—	—	—	—	—	9.8	9.2	8.0
115.0	—	—	—	—	—	—	8.8	8.2	7.2
120.0	—	—	—	—	—	—	7.8	7.2	6.2
125.0	—	—	—	—	—	—	—	6.4	5.4
130.0	—	—	—	—	—	—	—	5.6	4.6
135.0	—	—	—	—	—	—	—	4.8	3.8
140.0	—	—	—	—	—	—	—	—	3.2
145.0	—	—	—	—	—	—	—	—	2.6
150.0	—	—	—	—	—	—	—	—	2.0

THIS CHART IS ONLY A GUIDE AND SHOULD NOT BE USED TO OPERATE THE CRANE.
The individual crane's load chart, operating instructions and other instructional plates must be read and understood prior to operating the crane

View thousands of Crane Specifications on FreeCraneSpecs.com

Load charts

Main boom

12,9 m – 50,8 m (42.3 ft – 166.6 ft) | 25.6 ft x 24.6 ft 100% | 6000 kg (13,200 lb) | 360°

Pounds x 1000

Feet	42.3	58.0	73.6	89.1	104.4	120.2	135.7	151.2
10.0	208.0	199.0	188.0	143.0	—	—	—	—
15.0	159.0	160.0	146.0	128.0	110.0	—	—	—
20.0	110.0	102.0	97.0	89.0	80.0	73.0	58.0	
25.0	77.0	75.0	71.0	66.0	63.0	59.0	56.0	44.0
30.0	56.0	57.0	55.0	51.0	50.0	48.0	45.0	40.8
35.0	—	45.0	45.0	43.6	41.0	39.6	36.8	34.4
40.0	—	36.0	36.2	35.6	34.2	32.6	30.4	28.2
45.0	—	28.6	30.0	29.8	28.6	27.2	25.4	23.6
50.0	—	—	25.2	25.2	24.2	23.0	21.4	19.8
55.0	—	—	20.8	21.4	20.6	19.8	18.2	16.8
60.0	—	—	—	18.6	17.8	17.0	15.6	14.4
65.0	—	—	—	15.8	15.4	14.6	13.4	12.2
70.0	—	—	—	13.4	13.4	12.8	11.6	10.4
75.0	—	—	—	11.4	11.4	11.0	10.0	8.8
80.0	—	—	—	—	9.8	9.6	8.6	7.4
85.0	—	—	—	—	8.4	8.4	7.2	6.2
90.0	—	—	—	—	7.2	7.0	6.2	5.2
95.0	—	—	—	—	—	6.0	5.2	4.2
100.0	—	—	—	—	—	5.0	4.4	3.4
105.0	—	—	—	—	—	—	3.4	2.6
110.0	—	—	—	—	—	—	2.6	2.0
115.0	—	—	—	—	—	—	2.0	—

12,9 m – 50,8 m (42.3 ft – 166.6 ft) | 25.6 ft x 24.6 ft 100% | 1000 kg (2200 lb) | 360°

Pounds x 1000

Feet	42.3	58.0	73.6	89.1	104.4	120.2	135.7	151.2	166.6
10.0	205.0	199.0	188.0	143.0	—	—	—	—	—
15.0	154.0	142.0	124.0	115.0	101.0	—	—	—	—
20.0	93.0	89.0	83.0	76.0	71.0	65.0	57.0	—	—
25.0	64.0	63.0	60.0	58.0	54.0	51.0	47.0	40.8	—
30.0	47.0	47.0	46.0	45.0	42.0	39.6	36.6	33.8	30.6
35.0	—	35.8	35.8	35.0	33.4	31.6	29.2	27.0	24.4
40.0	—	28.2	28.6	28.2	27.0	25.6	23.6	21.8	19.6
45.0	—	22.0	23.2	23.2	22.2	21.2	19.4	17.8	15.8
50.0	—	—	19.2	19.4	18.6	17.6	16.2	14.6	12.8
55.0	—	—	15.6	16.4	15.6	14.8	13.4	12.2	10.4
60.0	—	—	—	13.8	13.2	12.6	11.2	10.0	8.4
65.0	—	—	—	11.6	11.2	10.6	9.4	8.2	6.6
70.0	—	—	—	9.6	9.4	9.0	7.8	6.8	5.2
75.0	—	—	—	8.0	8.0	7.6	6.4	5.4	3.8
80.0	—	—	—	—	6.6	6.2	5.2	4.2	2.8
85.0	—	—	—	—	5.4	5.2	4.0	3.2	—
90.0	—	—	—	—	4.4	4.2	3.2	2.2	—
95.0	—	—	—	—	—	3.2	2.4	—	—
100.0	—	—	—	—	—	2.4	—	—	—

THIS CHART IS ONLY A GUIDE AND SHOULD NOT BE USED TO OPERATE THE CRANE.
The individual crane's load chart, operating instructions and other instructional plates must be read and understood prior to operating the crane.

View thousands of Crane Specifications on FreeCraneSpecs.com

Working range

42 ft – 167 ft main boom with hydraulic 36 ft and 59 ft swingaway 1x26 ft and 2x20 ft inserts

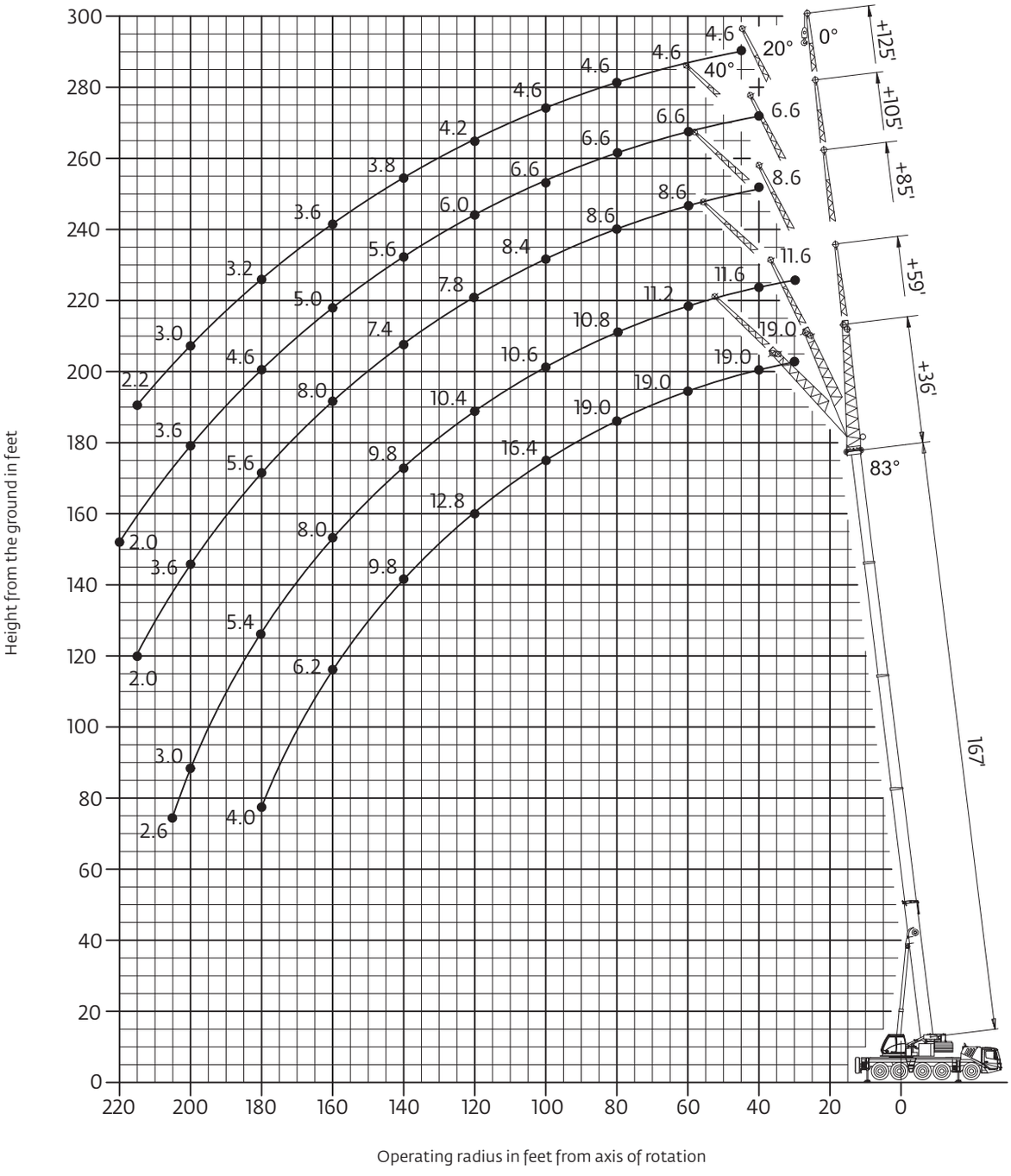

Hook heights shown in the working range diagram do not consider loaded boom deflection.

THIS CHART IS ONLY A GUIDE AND SHOULD NOT BE USED TO OPERATE THE CRANE.
The individual crane's load chart, operating instructions and other instructional plates must be read and understood prior to operating the crane

View thousands of Crane Specifications on FreeCraneSpecs.com

Load charts

Hydraulic offsettable swingaway

Intermediate angle

50,8 m (167 ft) | 11-18-26-32-38 m (36-59-85-105-125 ft) | 40 100 kg (88,400 lb) | 25.6 ft x 24.6 ft (100%) | 360°

Pounds x 1000

Feet	167 + 36			167 + 59			167 + 85			167 + 105			167 + 125		
	0°	0° – 20°	20° – 40°	0°	0° – 20°	20° – 40°	0°	0° – 20°	20° – 40°	0°	0° – 20°	20° – 40°	0°	0° – 20°	20° – 40°
30.0	19.0	–	–	11.6	–	–	–	–	–	–	–	–	–	–	–
35.0	19.0	–	–	11.6	–	–	–	–	–	–	–	–	–	–	–
40.0	19.0	19.0	–	11.6	–	–	8.6	–	–	6.6	–	–	–	–	–
45.0	19.0	19.0	–	11.4	–	–	8.6	–	–	6.6	–	–	4.6	–	–
50.0	19.0	19.0	18.4	11.4	10.6	–	8.6	–	–	6.6	–	–	4.6	–	–
55.0	19.0	19.0	18.2	11.2	10.6	–	8.6	8.6	–	6.6	–	–	4.6	–	–
60.0	19.0	19.0	18.2	11.2	10.6	–	8.6	8.6	–	6.6	6.6	–	4.6	–	–
65.0	19.0	19.0	18.2	11.2	10.4	–	8.6	8.6	–	6.6	6.6	–	4.6	–	–
70.0	19.0	19.0	18.2	11.0	10.4	10.0	8.6	8.6	–	6.6	6.6	–	4.6	4.6	–
75.0	19.0	19.0	18.0	11.0	10.4	9.8	8.6	8.4	8.2	6.6	6.6	6.6	4.6	4.6	–
80.0	19.0	18.8	18.0	10.8	10.2	9.8	8.6	8.4	8.0	6.6	6.6	6.6	4.6	4.6	4.6
85.0	18.8	18.0	17.6	10.8	10.2	9.6	8.6	8.2	8.0	6.6	6.6	6.4	4.6	4.6	4.6
90.0	18.0	17.0	16.8	10.8	10.2	9.6	8.6	8.2	7.8	6.6	6.4	6.2	4.6	4.6	4.6
95.0	17.2	15.8	15.8	10.6	10.0	9.4	8.6	8.0	7.8	6..6	6.2	6.2	4.6	4.6	4.6
100.0	16.4	15.0	14.8	10.6	10.0	9.4	8.4	7.8	7.6	6.6	6.2	6.0	4.6	4.6	4.6
105.0	15.2	14.4	14.4	10.6	10.0	9.2	8.2	7.8	7.6	6.4	6.0	6.0	4.6	4.4	4.4
110.0	14.2	13.8	13.8	10.4	10.0	9.2	8.2	7.6	7.4	6.2	6.0	5.8	4.4	4.4	4.4
115.0	13.4	13.4	13.4	10.4	9.8	9.2	8.0	7.4	7.4	6.2	5.8	5.8	4.4	4.2	4.2
120.0	12.6	12.8	12.8	10.4	9.8	9.0	7.8	7.4	7.2	6.0	5.8	5.6	4.2	4.2	4.2
125.0	12.0	12.0	12.4	10.2	9.6	9.0	7.8	7.2	7.0	5.8	5.6	5.6	4.2	4.0	4.0
130.0	11.2	11.2	11.8	10.2	9.6	9.0	7.6	7.2	7.0	5.8	5.6	5.4	4.0	4.0	4.0
135.0	10.2	10.2	10.8	10.0	9.4	9.0	7.4	7.0	6.8	5.6	5.4	5.4	4.0	3.8	4.0
140.0	9.2	9.2	9.8	9.8	9.4	9.0	7.4	7.0	6.8	5.6	5.2	5.2	3.8	3.8	3.8
145.0	8.4	8.4	8.8	9.4	9.4	8.8	7.2	6.8	6.6	5.4	5.2	5.2	3.8	3.8	3.8
150.0	7.6	7.6	8.0	8.6	8.6	8.8	7.0	6.6	6.6	5.4	5.0	5.2	3.8	3.6	3.6
155.0	7.0	7.0	7.4	7.8	7.8	8.6	7.0	6.6	6.4	5.2	5.0	5.0	3.6	3.6	3.6
160.0	6.2	6.2	–	7.2	7.2	8.0	6.8	6.4	6.4	5.0	5.0	5.0	3.6	3.4	3.6
165.0	5.6	5.6	–	6.6	6.6	7.2	6.6	6.4	6.2	5.0	4.8	4.8	3.4	3.4	3.4
170.0	5.0	5.0	–	6.0	6.0	6.6	6.0	6.0	6.2	4.8	4.8	4.8	3.4	3.4	3.4
175.0	4.6	4.6	–	5.4	5.4	6.0	5.4	5.4	6.0	4.8	4.6	4.6	3.2	3.2	3.4
180.0	4.0	–	–	4.8	4.8	5.4	4.8	4.8	5.6	4.6	4.6	4.6	3.2	3.2	3.2
185.0	–	–	–	4.4	4.4	–	4.4	4.4	5.0	4.4	4.4	4.4	3.2	3.0	3.2
190.0	–	–	–	3.8	3.8	–	4.0	4.0	4.4	4.0	4.0	4.4	3.0	3.0	3.2
195.0	–	–	–	3.4	3.4	–	3.4	3.4	4.0	3.4	3.4	4.0	3.0	3.0	3.0
200.0	–	–	–	3.0	3.0	–	3.0	3.0	3.6	3.0	3.0	3.6	2.8	2.8	3.0
205.0	–	–	–	2.6	–	–	2.6	2.6	–	2.6	2.6	3.2	2.4	2.4	3.0
210.0	–	–	–	–	–	–	2.2	2.2	–	2.2	2.2	2.8	2.0	2.0	2.6
215.0	–	–	–	–	–	–	2.0	2.0	–	–	–	2.4	–	–	2.2
220.0	–	–	–	–	–	–	–	–	–	–	–	2.0	–	–	–

Loads for luffing

50,8 m (167 ft) | 11-18-26-32-38 m (36-59-85-105-125 ft) | 40 100 kg (88,400 lb) | 25.6 ft x 24.6 ft (100%) | 360°

Pounds x 1000

Feet	167 + 36		167 + 59		167 + 85		167 + 105		167 + 125	
	0° – 20°	20° – 40°	0° – 20°	20° – 40°	0° – 20°	20° – 40°	0° – 20°	20° – 40°	0° – 20°	20° – 40°
40.0	18.0									
45.0	18.0									
50.0	18.0	16.2	10.2							
55.0	18.0	16.0	10.0		8.2					
60.0	18.0	15.6	10.0		8.2		6.4			
65.0	18.0	15.4	10.0		8.2		6.4			
70.0	17.6	15.2	9.8	8.8	8.2		6.4		4.4	
75.0	17.0	14.8	9.8	8.6	8.0	7.8	6.4	6.2	4.4	
80.0	16.6	14.6	9.8	8.6	8.0	7.6	6.4	6.2	4.4	4.4
85.0	16.2	14.4	9.8	8.4	7.8	7.6	6.2	6.0	4.4	4.4
90.0	15.8	14.2	9.6	8.2	7.8	7.4	6.0	6.0	4.4	4.4
95.0	15.2	14.2	9.4	8.0	7.6	7.4	6.0	5.8	4.4	4.4
100.0	14.2	14.0	9.0	8.0	7.4	7.2	5.8	5.8	4.4	4.4
105.0	13.8	13.6	8.8	7.8	7.4	7.2	5.8	5.6	4.2	4.2
110.0	13.2	13.2	8.6	7.8	7.2	7.0	5.6	5.6	4.2	4.2
115.0	12.6	12.6	8.4	7.6	7.2	7.0	5.6	5.4	4.0	4.0
120.0	12.2	12.2	8.2	7.6	7.0	6.8	5.4	5.4	4.0	4.0
125.0	11.0	11.8	8.0	7.4	7.0	6.8	5.4	5.2	3.8	3.8
130.0	10.2	10.6	7.8	7.4	6.8	6.6	5.2	5.2	3.8	3.8
135.0	9.2	9.8	7.6	7.2	6.6	6.6	5.2	5.2	3.6	3.8
140.0	8.4	8.8	7.4	7.2	6.6	6.4	5.0	5.0	3.6	3.6
145.0	7.6	8.0	7.2	7.2	6.4	6.4	5.0	5.0	3.6	3.6
150.0	7.0	7.4	7.2	7.0	6.4	6.2	4.8	4.8	3.4	3.6
155.0	6.2	6.6	7.0	7.0	6.2	6.2	4.8	4.8	3.4	3.4
160.0	5.6		6.4	6.8	6.2	6.0	4.6	4.6	3.2	3.4
165.0	5.2		6.0	6.6	6.0	6.0	4.6	4.6	3.2	3.2
170.0	4.6		5.4	6.0	5.4	5.8	4.6	4.6	3.2	3.2
175.0	4.2		4.8	5.4	5.0	5.6	4.4	4.4	3.0	3.2
180.0			4.4	4.8	4.4	5.0	4.4	4.4	3.0	3.0
185.0			4.0		4.0	4.6	4.0	4.2	3.0	3.0
190.0			3.6		3.6	4.0	3.6	4.2	2.8	3.0
195.0			3.2		3.2	3.6	3.2	3.8	2.8	3.0
200.0			2.8		2.8	3.2	2.8	3.2	2.6	2.8
205.0					2.4		2.4	2.8	2.2	2.8
210.0					2.0		2.0	2.4		2.4
215.0								2.2		2.0

THIS CHART IS ONLY A GUIDE AND SHOULD NOT BE USED TO OPERATE THE CRANE.
The individual crane's load chart, operating instructions and other instructional plates must be read and understood prior to operating the crane.

View thousands of Crane Specifications on FreeCraneSpecs.com

Load charts

Hydraulic offsettable swingaway

Intermediate angle

50,8 m (167 ft) | 11-18-26-32-38 m (36-59-85-105-125 ft) | 21 000 kg (46,200 lb) | 25.6 ft x 24.6 ft (100%) | 360°

Pounds x 1000

Feet	167 + 36			167 + 59			167 + 85			167 + 105			167 + 125		
	0°	0° – 20°	20° – 40°	0°	0° – 20°	20° – 40°	0°	0° – 20°	20° – 40°	0°	0° – 20°	20° – 40°	0°	0° – 20°	20° – 40°
30.0	19.0	–	–	11.6	–	–	–	–	–	–	–	–	–	–	–
35.0	19.0	–	–	11.6	–	–	–	–	–	–	–	–	–	–	–
40.0	19.0	19.0	–	11.6	–	–	8.6	–	–	6.6	–	–	–	–	–
45.0	19.0	19.0	–	11.4	–	–	8.6	–	–	6.6	–	–	4.6	–	–
50.0	19.0	19.0	18.4	11.4	10.6	–	8.6	–	–	6.6	–	–	4.6	–	–
55.0	19.0	19.0	18.2	11.2	10.6	–	8.6	8.6	–	6.6	–	–	4.6	–	–
60.0	19.0	19.0	18.2	11.2	10.6	–	8.6	8.6	–	6.6	6.6	–	4.6	–	–
65.0	19.0	19.0	18.2	11.2	10.4	–	8.6	8.6	–	6.6	6.6	–	4.6	–	–
70.0	18.6	18.6	18.2	11.0	10.4	10.0	8.6	8.6	–	6.6	6.6	–	4.6	4.6	–
75.0	16.6	16.6	18.0	11.0	10.4	9.8	8.6	8.4	8.2	6.6	6.6	6.6	4.6	4.6	–
80.0	14.8	14.8	16.2	10.8	10.2	9.8	8.6	8.4	8.0	6.6	6.6	6.6	4.6	4.6	4.6
85.0	13.2	13.2	14.4	10.8	10.2	9.6	8.6	8.2	8.0	6.6	6.6	6.4	4.6	4.6	4.6
90.0	11.8	11.8	13.0	10.8	10.2	9.6	8.6	8.2	7.8	6.6	6.4	6.2	4.6	4.6	4.6
95.0	10.6	10.6	11.6	10.6	10.0	9.4	8.6	8.0	7.8	6.6	6.2	6.2	4.6	4.6	4.6
100.0	9.4	9.4	10.4	10.0	10.0	9.4	8.4	7.8	7.6	6.6	6.2	6.0	4.6	4.6	4.6
105.0	8.4	8.4	9.2	9.0	9.0	9.2	8.2	7.8	7.6	6.4	6.0	6.0	4.6	4.4	4.4
110.0	7.4	7.4	8.2	8.0	8.0	9.2	7.8	7.6	7.4	6.2	6.0	5.8	4.4	4.4	4.4
115.0	6.4	6.4	7.2	7.2	7.2	8.6	7.0	7.0	7.4	6.2	5.8	5.8	4.4	4.2	4.2
120.0	5.6	5.6	6.4	6.4	6.4	7.6	6.2	6.2	7.2	6.0	5.8	5.6	4.2	4.2	4.2
125.0	5.0	5.0	5.6	5.6	5.6	6.8	5.4	5.4	6.8	5.2	5.2	5.6	4.2	4.0	4.0
130.0	4.2	4.2	4.8	5.0	5.0	6.2	4.8	4.8	6.0	4.6	4.6	5.4	4.0	4.0	4.0
135.0	3.6	3.6	4.2	4.4	4.4	5.4	4.2	4.2	5.2	4.0	4.0	5.2	3.6	3.6	4.0
140.0	3.0	3.0	3.4	3.8	3.8	4.8	3.6	3.6	4.6	3.4	3.4	4.6	3.0	3.0	3.8
145.0	2.4	2.4	2.8	3.2	3.2	4.2	3.0	3.0	4.0	2.8	2.8	4.0	2.6	2.6	3.6
150.0	2.0	2.0	2.4	2.6	2.6	3.6	2.6	2.6	3.4	2.4	2.4	3.4	2.0	2.0	3.0
155.0	–	–	–	2.2	2.2	3.0	2.0	2.0	3.0	–	–	2.8	–	–	2.6
160.0	–	–	–	–	–	2.4	–	–	2.4	–	–	2.4	–	–	2.0
165.0	–	–	–	–	–	2.0	–	–	2.0	–	–	–	–	–	–

Loads for luffing

50,8 m (167 ft) | 11-18-26-32-38 m (36-59-85-105-125 ft) | 21 000 kg (46,200 lb) | 25.6 ft x 24.6 ft (100%) | 360°

Pounds x 1000

Feet	167 + 36		167 + 59		167 + 85		167 + 105		167 + 125	
	0° – 20°	20° – 40°	0° – 20°	20° – 40°	0° – 20°	20° – 40°	0° – 20°	20° – 40°	0° – 20°	20° – 40°
40.0	18.0	–	–	–	–	–	–	–	–	–
45.0	18.0	–	–	–	–	–	–	–	–	–
50.0	18.0	16.2	10.2	–	–	–	–	–	–	–
55.0	18.0	16.0	10.0	–	8.2	–	–	–	–	–
60.0	18.0	15.6	10.0	–	8.2	–	6.4	–	–	–
65.0	18.0	15.4	10.0	–	8.2	–	6.4	–	–	–
70.0	17.6	15.2	9.8	8.8	8.2	–	6.4	–	4.4	–
75.0	16.6	14.8	9.8	8.6	8.0	7.8	6.4	6.2	4.4	–
80.0	14.8	14.6	9.8	8.6	8.0	7.6	6.4	6.2	4.4	4.4
85.0	13.2	14.4	9.8	8.4	7.8	7.6	6.2	6.0	4.4	4.4
90.0	11.8	13.0	9.6	8.2	7.8	7.4	6.0	6.0	4.4	4.4
95.0	10.6	11.6	9.4	8.0	7.6	7.4	6.0	5.8	4.4	4.4
100.0	9.4	10.4	9.0	8.0	7.4	7.2	5.8	5.8	4.4	4.4
105.0	8.4	9.2	8.8	7.8	7.4	7.2	5.8	5.6	4.2	4.2
110.0	7.4	8.2	8.0	7.8	7.2	7.0	5.6	5.6	4.2	4.2
115.0	6.4	7.2	7.2	7.6	7.0	7.0	5.6	5.4	4.0	4.0
120.0	5.6	6.2	6.4	7.6	6.2	6.8	5.4	5.4	4.0	4.0
125.0	4.8	5.4	5.6	6.8	5.4	6.8	5.2	5.2	3.8	3.8
130.0	4.0	4.6	5.0	6.0	4.8	6.0	4.6	5.2	3.8	3.8
135.0	3.4	4.0	4.2	5.4	4.2	5.2	4.0	5.2	3.6	3.8
140.0	2.8	3.2	3.6	4.6	3.6	4.6	3.4	4.6	3.0	3.6
145.0	2.2	2.6	3.0	4.0	3.0	4.0	2.8	4.0	2.6	3.6
150.0	–	2.2	2.6	3.4	2.6	3.4	2.4	3.4	2.0	3.0
155.0	–	–	2.0	2.8	2.0	3.0	–	2.8	–	2.6
160.0	–	–	–	2.4	–	2.4	–	2.4	–	2.0
165.0	–	–	–	–	–	2.0	–	–	–	–

THIS CHART IS ONLY A GUIDE AND SHOULD NOT BE USED TO OPERATE THE CRANE.
The individual crane's load chart, operating instructions and other instructional plates must be read and understood prior to operating the crane

View thousands of Crane Specifications on FreeCraneSpecs.com

Working range

42 ft – 167 ft main boom with 12 ft integrated heavy duty jib

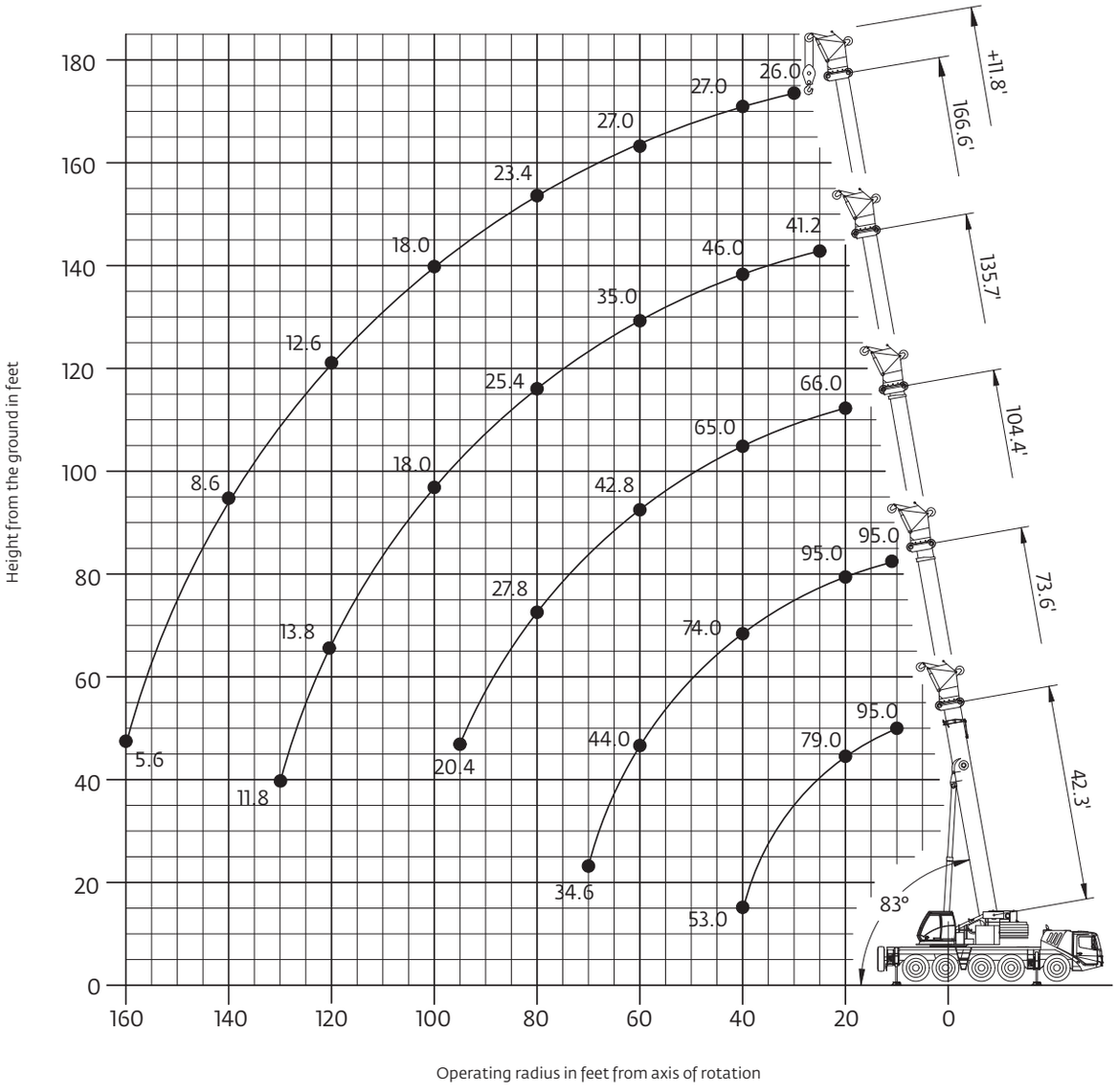

Hook heights shown in the working range diagram do not consider loaded boom deflection.

THIS CHART IS ONLY A GUIDE AND SHOULD NOT BE USED TO OPERATE THE CRANE.
The individual crane's load chart, operating instructions and other instructional plates must be read and understood prior to operating the crane.

View thousands of Crane Specifications on FreeCraneSpecs.com

Load charts
Integrated heavy duty jib

Intermediate angle

12,9 m – 50,8 m (42.3 ft – 166.6 ft) | 3,6 m (11.8 ft) | 40 100 kg (88,400 lb) | 25.6 ft x 24.6 ft (100%) | 360°

Pounds x 1000

Feet	42.3 + 11.8			73.6 + 11.8			104.4 + 11.8			135.7 + 11.8			166.6 + 11.8		
	0°	< 20°	< 40°	0°	< 20°	< 40°	0°	< 20°	< 40°	0°	< 20°	< 40°	0°	< 20°	< 40°
10.0	95.0	95.0	88.0	–	95.0	–	–	–	–	–	–	–	–	–	–
15.0	91.0	87.0	86.0	–	95.0	88.0	–	–	–	–	–	–	–	–	–
20.0	79.0	78.0	79.0	95.0	94.0	88.0	–	66.0	66.0	–	–	–	–	–	–
25.0	70.0	71.0	74.0	92.0	87.0	85.0	78.0	66.0	66.0	–	41.2	41.2	–	–	–
30.0	63.0	66.0	71.0	84.0	82.0	81.0	75.0	66.0	66.0	–	41.2	41.2	–	26.0	26.0
35.0	57.0	62.0	69.0	77.0	76.0	78.0	70.0	66.0	66.0	46.0	41.2	41.2	–	26.0	26.0
40.0	53.0	–	–	71.0	72.0	74.0	65.0	64.0	65.0	46.0	41.2	41.2	27.0	26.0	26.0
45.0	–	–	–	66.0	66.0	66.0	60.0	60.0	51.0	43.4	41.2	41.2	27.0	26.0	26.0
50.0	–	–	–	58.0	58.0	58.0	54.0	54.0	55.0	40.2	40.0	41.2	27.0	26.0	26.0
55.0	–	–	–	50.0	50.0	50.0	48.0	48.0	48.0	37.2	37.2	38.0	27.0	26.0	26.0
60.0	–	–	–	44.0	44.0	–	42.6	42.6	42.8	34.2	34.4	35.0	27.0	26.0	26.0
65.0	–	–	–	38.8	38.8	–	38.2	38.2	38.4	31.2	31.2	31.8	27.0	26.0	26.0
70.0	–	–	–	34.6	34.6	–	34.4	34.4	34.6	28.8	29.0	29.4	26.0	25.8	26.0
75.0	–	–	–	–	–	–	31.0	31.0	31.0	26.8	27.0	27.4	24.4	24.4	25.0
80.0	–	–	–	–	–	–	27.8	27.8	27.8	25.0	25.2	25.4	22.8	23.0	23.4
85.0	–	–	–	–	–	–	25.0	25.0	25.0	23.2	23.2	23.4	21.4	21.4	21.8
90.0	–	–	–	–	–	–	22.6	22.6	–	21.2	21.2	21.2	20.2	20.2	20.6
95.0	–	–	–	–	–	–	20.4	20.4	–	19.2	19.2	19.2	19.0	19.0	19.2
100.0	–	–	–	–	–	–	–	–	–	17.6	17.8	18.0	17.6	17.8	18.0
105.0	–	–	–	–	–	–	–	–	–	16.6	16.8	17.0	16.4	16.4	16.6
110.0	–	–	–	–	–	–	–	–	–	15.6	15.8	16.0	15.0	15.0	15.2
115.0	–	–	–	–	–	–	–	–	–	14.6	14.8	–	14.0	14.0	14.0
120.0	–	–	–	–	–	–	–	–	–	13.8	13.8	–	12.6	12.6	12.6
125.0	–	–	–	–	–	–	–	–	–	12.8	12.8	–	11.4	11.4	11.6
130.0	–	–	–	–	–	–	–	–	–	11.8	11.8	–	10.4	10.4	10.4
135.0	–	–	–	–	–	–	–	–	–	–	–	–	9.4	9.4	9.4
140.0	–	–	–	–	–	–	–	–	–	–	–	–	8.6	8.6	–
145.0	–	–	–	–	–	–	–	–	–	–	–	–	7.8	7.8	–
150.0	–	–	–	–	–	–	–	–	–	–	–	–	7.0	7.0	–
155.0	–	–	–	–	–	–	–	–	–	–	–	–	6.2	6.2	–
160.0	–	–	–	–	–	–	–	–	–	–	–	–	5.6	–	–

Loads for luffing

12,9 m – 50,8 m (42.3 ft – 166.6 ft) | 3,6 m (11.8 ft) | 40 100 kg (88,400 lb) | 25.6 ft x 24.6 ft (100%) | 360°

Pounds x 1000

Feet	42.3 + 11.8		73.6 + 11.8		104.4 + 11.8		135.7 + 11.8		166.6 + 11.8	
	0° – 20°	20° – 40°	0° – 20°	20° – 40°	0° – 20°	20° – 40°	0° – 20°	20° – 40°	0° – 20°	20° – 40°
10.0	67.0	67.0	71.0	–	–	–	–	–	–	–
15.0	64.0	64.0	69.0	67.0	–	–	–	–	–	–
20.0	62.0	62.0	66.0	66.0	63.0	63.0	–	–	–	–
25.0	58.0	60.0	64.0	64.0	63.0	63.0	39.2	39.2	–	–
30.0	55.0	60.0	63.0	63.0	63.0	63.0	39.2	39.2	24.8	24.6
35.0	53.0	60.0	62.0	62.0	63.0	63.0	39.2	39.2	24.8	24.6
40.0	–	–	59.0	61.0	61.0	62.0	39.2	39.2	24.8	24.6
45.0	–	–	57.0	60.0	57.0	58.0	39.2	39.2	24.8	24.6
50.0	–	–	54.0	54.0	53.0	54.0	39.2	39.2	24.8	24.6
55.0	–	–	46.0	47.0	46.0	47.0	35.4	36.2	24.8	24.6
60.0	–	–	40.4	–	40.4	40.6	32.8	33.2	24.8	24.6
65.0	–	–	35.6	–	35.6	35.8	29.8	30.2	24.8	24.6
70.0	–	–	31.6	–	31.6	31.6	27.6	28.0	24.6	24.6
75.0	–	–	–	–	28.2	28.2	25.8	26.0	23.2	23.8
80.0	–	–	–	–	25.2	25.2	24.0	24.2	21.8	22.2
85.0	–	–	–	–	22.6	22.6	21.6	21.6	20.4	20.8
90.0	–	–	–	–	20.4	–	19.4	19.4	19.2	19.6
95.0	–	–	–	–	18.6	–	17.8	18.0	18.2	18.4
100.0	–	–	–	–	–	–	16.8	17.2	17.0	17.0
105.0	–	–	–	–	–	–	16.0	16.2	15.4	15.4
110.0	–	–	–	–	–	–	15.0	15.0	14.0	14.0
115.0	–	–	–	–	–	–	13.8	–	12.6	12.8
120.0	–	–	–	–	–	–	12.6	–	11.6	11.6
125.0	–	–	–	–	–	–	11.6	–	10.4	10.4
130.0	–	–	–	–	–	–	10.6	–	9.4	9.6
135.0	–	–	–	–	–	–	–	–	8.6	8.6
140.0	–	–	–	–	–	–	–	–	7.8	–
145.0	–	–	–	–	–	–	–	–	7.0	–
150.0	–	–	–	–	–	–	–	–	6.4	–
155.0	–	–	–	–	–	–	–	–	5.8	–

THIS CHART IS ONLY A GUIDE AND SHOULD NOT BE USED TO OPERATE THE CRANE.
The individual crane's load chart, operating instructions and other instructional plates must be read and understood prior to operating the crane

View thousands of Crane Specifications on FreeCraneSpecs.com

Load charts

Integrated heavy duty jib

Intermediate angle

12,9 m – 50,8 m (42.3 ft – 166.6 ft)	3,6 m (11.8 ft)	21 000 kg (46,200 lb)	25.6 ft x 24.6 ft (100%)	360°

Pounds x 1000

Feet	42.3 + 11.8			73.6 + 11.8			104.4 + 11.8			135.7 + 11.8			166.6'+ 11.8		
	0°	< 20°	< 40°	0°	< 20°	< 40°	0°	< 20°	< 40°	0°	< 20°	< 40°	0°	< 20°	< 40°
10.0	95.0	95.0	88.0	–	95.0	–	–	–	–	–	–	–	–	–	–
15.0	91.0	87.0	86.0	–	95.0	88.0	–	–	–	–	–	–	–	–	–
20.0	79.0	78.0	79.0	95.0	94.0	88.0	–	66.0	66.0	–	–	–	–	–	–
25.0	70.0	71.0	74.0	92.0	87.0	85.0	78.0	66.0	66.0	–	41.2	41.2	–	–	–
30.0	63.0	66.0	71.0	77.0	77.0	78.0	70.0	66.0	66.0	–	41.2	41.2	–	26.0	26.0
35.0	57.0	62.0	69.0	63.0	63.0	64.0	57.0	57.0	58.0	46.0	41.2	41.2	–	26.0	26.0
40.0	53.0	–	–	53.0	53.0	54.0	48.0	48.0	49.0	43.0	41.2	41.2	27.0	26.0	26.0
45.0	–	–	–	47.0	47.0	47.0	41.0	41.0	41.4	36.6	36.6	37.2	27.0	26.0	26.0
50.0	–	–	–	40.6	40.6	40.8	35.4	35.4	35.6	32.6	32.4	33.0	27.0	26.0	26.0
55.0	–	–	–	35.0	35.0	35.2	30.8	31.0	31.8	30.0	30.0	30.4	27.0	26.0	26.0
60.0	–	–	–	30.4	30.4	–	28.6	28.8	29.2	26.8	26.8	27.0	23.8	23.8	24.2
65.0	–	–	–	26.6	26.6	–	26.4	26.4	26.6	23.8	23.8	24.0	21.0	21.0	21.4
70.0	–	–	–	23.4	23.4	–	23.6	23.6	23.8	21.2	21.2	21.4	18.6	18.6	18.8
75.0	–	–	–	–	–	–	21.0	21.0	21.2	19.0	19.0	19.0	16.6	16.6	16.8
80.0	–	–	–	–	–	–	18.8	18.8	18.8	17.0	17.0	17.0	14.6	14.6	14.8
85.0	–	–	–	–	–	–	16.6	16.6	16.6	15.2	15.2	15.4	13.0	13.0	13.2
90.0	–	–	–	–	–	–	14.8	14.8	–	13.6	13.6	13.8	11.6	11.6	11.8
95.0	–	–	–	–	–	–	13.2	13.2	–	12.4	12.4	12.4	10.2	10.2	10.4
100.0	–	–	–	–	–	–	–	–	–	11.0	11.0	11.0	9.0	9.0	9.2
105.0	–	–	–	–	–	–	–	–	–	9.6	9.6	9.6	8.0	8.0	8.0
110.0	–	–	–	–	–	–	–	–	–	8.6	8.6	8.6	7.0	7.0	7.0
115.0	–	–	–	–	–	–	–	–	–	7.6	7.6	–	6.2	6.2	6.2
120.0	–	–	–	–	–	–	–	–	–	6.6	6.6	–	5.2	5.2	5.4
125.0	–	–	–	–	–	–	–	–	–	5.8	5.8	–	4.6	4.6	4.6
130.0	–	–	–	–	–	–	–	–	–	5.0	5.0	–	3.8	3.8	3.8
135.0	–	–	–	–	–	–	–	–	–	–	–	–	3.0	3.0	3.0
140.0	–	–	–	–	–	–	–	–	–	–	–	–	2.4	2.4	

Loads for luffing

12,9 m – 50,8 m (42.3 ft – 166.6 ft)	3,6 m (11.8 ft)	21 000 kg (46,200 lb)	25.6 ft x 24.6 (100%)	360°

Pounds x 1000

Feet	42.3 + 11.8		73.6 + 11.8		104.4 + 11.8		135.7 + 11.8		166.6 + 11.8	
	0° – 20°	20° – 40°	0° – 20°	20° – 40°	0° – 20°	20° – 40°	0° – 20°	20° – 40°	0° – 20°	20° – 40°
10.0	67.0	67.0	71.0	–	–	–	–	–	–	–
15.0	64.0	64.0	69.0	67.0	–	–	–	–	–	–
20.0	62.0	62.0	66.0	66.0	63.0	63.0	–	–	–	–
25.0	58.0	60.0	64.0	64.0	63.0	63.0	39.2	39.2	–	–
30.0	55.0	60.0	63.0	63.0	63.0	63.0	39.2	39.2	24.8	24.6
35.0	53.0	60.0	62.0	62.0	57.0	58.0	39.2	39.2	24.8	24.6
40.0	–	–	52.0	52.0	48.0	49.0	39.2	39.2	24.8	24.6
45.0	–	–	45.0	45.0	41.0	41.4	36.6	37.2	24.8	24.6
50.0	–	–	37.6	37.8	35.4	35.6	31.6	32.0	24.8	24.6
55.0	–	–	32.2	32.2	30.2	30.4	28.4	29.0	24.8	24.6
60.0	–	–	27.8	–	27.4	28.0	26.6	27.0	23.8	24.2
65.0	–	–	24.2	–	24.6	24.8	23.8	24.0	21.0	21.4
70.0	–	–	21.4	–	21.6	21.8	20.8	21.0	18.6	18.8
75.0	–	–	–	–	19.2	19.2	18.2	18.4	16.6	16.8
80.0	–	–	–	–	17.0	17.0	16.2	16.2	14.6	14.8
85.0	–	–	–	–	15.2	15.2	14.2	14.4	13.0	13.2
90.0	–	–	–	–	13.6	–	12.6	12.8	11.6	11.6
95.0	–	–	–	–	12.0	–	11.2	11.2	10.0	10.2
100.0	–	–	–	–	–	–	10.0	10.0	8.8	9.0
105.0	–	–	–	–	–	–	8.8	8.8	7.6	7.8
110.0	–	–	–	–	–	–	7.8	7.8	6.6	6.8
115.0	–	–	–	–	–	–	6.8	–	5.8	5.8
120.0	–	–	–	–	–	–	6.0	–	5.0	5.0
125.0	–	–	–	–	–	–	5.2	–	4.2	4.2
130.0	–	–	–	–	–	–	4.6	–	3.4	3.4
135.0	–	–	–	–	–	–	–	–	2.8	2.8
140.0	–	–	–	–	–	–	–	–	2.2	–

THIS CHART IS ONLY A GUIDE AND SHOULD NOT BE USED TO OPERATE THE CRANE.
The individual crane's load chart, operating instructions and other instructional plates must be read and understood prior to operating the crane.

View thousands of Crane Specifications on FreeCraneSpecs.com

Symbols glossary

- Axles
- Boom
- Boom elevation
- Boom extension
- Boom length
- Boom nose
- Brakes
- Cab
- Counterweight
- Drive
- Electrical system
- Engine
- Extension
- Frame
- Fuel tank capacity
- Gear
- Grade
- Hoist
- Hookblock
- Hydraulic system
- Lights
- Oil
- Outrigger controls
- Outriggers
- Radius
- Rotation
- Speed
- Steering
- Suspension
- Swing
- Tires
- Transmission

View thousands of Crane Specifications on FreeCraneSpecs.com

Grove Manitowoc National Crane Potain

Regional headquarters

Manitowoc - Americas
Manitowoc, Wisconsin, USA
Tel: +1 920 684 6621
Fax: +1 920 683 6277

Shady Grove, Pennsylvania, USA
Tel: +1 717 597 8121
Fax: +1 717 597 4062

Manitowoc - Europe, Middle East & Africa
Ecully, France
Tel: +33 (0)4 72 18 20 20
Fax: +33 (0)4 72 18 20 00

Manitowoc - Asia Pacific
Shanghai, China
Tel: +86 21 6457 0066
Fax: +86 21 6457 4955

Regional offices

Americas
Brazil
Alphaville
Mexico
Monterrey
Chile
Santiago

Europe, Middle East & Africa
Czech Republic
Netvorice
France
Baudemont
Cergy
Decines
Germany
Langenfeld
Hungary
Budapest
Italy
Parabiago
Netherlands
Breda
Poland
Warsaw
Portugal
Baltar
Russia
Moscow
U.A.E.
Dubai
U.K.
Gawcott

Asia - Pacific
Australia
Brisbane
Melbourne
Sydney
China
Beijing
Xi'an
India
Hyderabad
Pune
Korea
Seoul
Philippines
Makati City
Singapore

Factories

Brazil
Alphaville
China
Tai An
Zhangjiagang
France
Charlieu
La Clayette
Moulins
Germany
Wilhelmshaven
India
Pune
Italy
Niella Tanaro
Portugal
Baltar
Fânzeres
Slovakia
Saris
USA
Manitowoc
Port Washington
Shady Grove

This document is non-contractual. Constant improvement and engineering progress make it necessary that we reserve the right to make specification, equipment, and price changes without notice. Illustrations shown may include optional equipment and accessories and may not include all standard equipment.

©2009 Manitowoc
Printed in USA
Form No. GMK5135
Part No. 08-020-2M-0209

www.manitowoc.com