View thousands of Crane Specifications on FreeCraneSpecs.com

GROVE®

GMK5120B

ALL TERRAIN HYDRAULIC CRANE

View thousands of Crane Specifications on FreeCraneSpecs.com

Dimensions

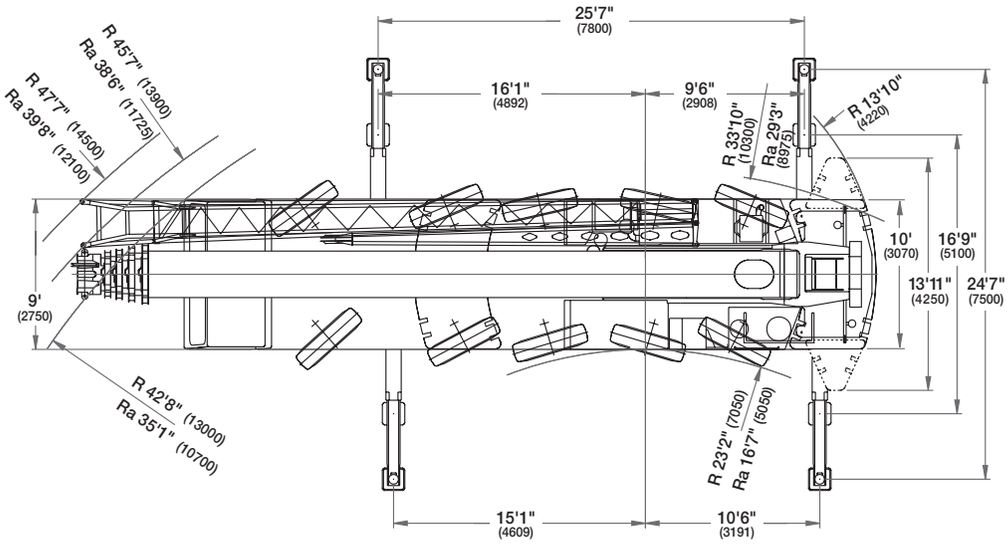

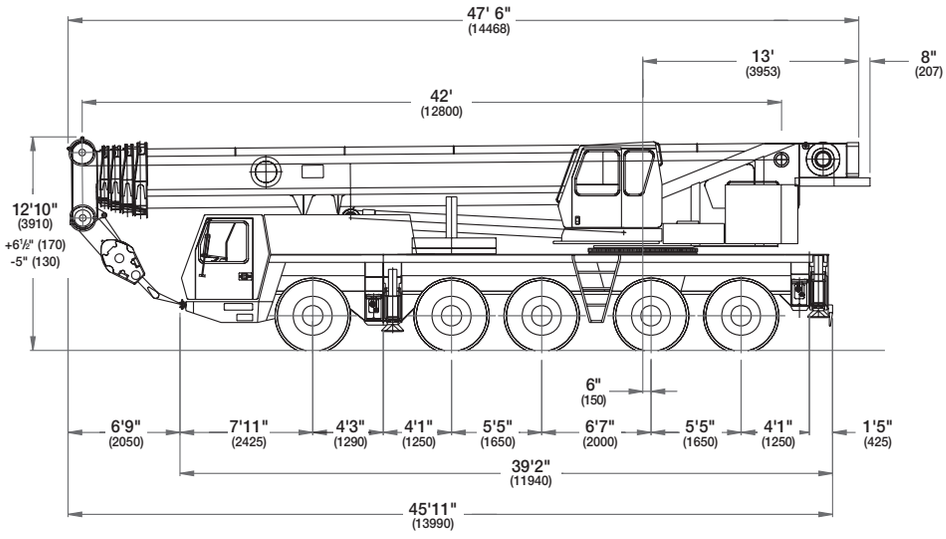

Note: ( ) Reference dimensions in mm

BASIC WEIGHTS (LBS.)	**Axles 1- 3**	**Axles 4 & 5**	**Total**
Mercedes Power, 20.5 tires, auxiliary hoist, 2nd oil cooler, outrigger pads, hydraulic offsettable swingaway with hydraulic reel, 10 x 8 x 10, 3MT counterweight bolted to superstructure.	72,367	48,621	120,988
Additions:			
Auxiliary boom nose	362	-207	155
20.5 Spare tire	-487	1,296	809
Driveline retarder	-64	716	652
*24,200 lbs. counterweight (15,400 lbs. on carrier)	14,660	970	15,630
REMOVAL:			
*Substitute IPO counterweight in lieu of auxiliary hoist	93	-46	47
Substitute manually offsettable swingaway in lieu of hydraulic swingaway (hose reel removed)	-686	296	-390
Remove 3MT bolted counterweight from superstructure	3,384	-9,777	-6,393
10 x 6 x 10 drive	-772	-22	-794
16.00 tires in lieu of standard 20.5	-556	-370	-926
14.00 tires in lieu of standard 20.5	-1,349	-899	-2,248

Reflects weight with superstructure facing forward.
* Auxiliary hoist is considered as part of the counterweight. Please see counterweight configuration sheet for build-up.

View thousands of Crane Specifications on FreeCraneSpecs.com

GMK5120B Trailing Boom Proposal

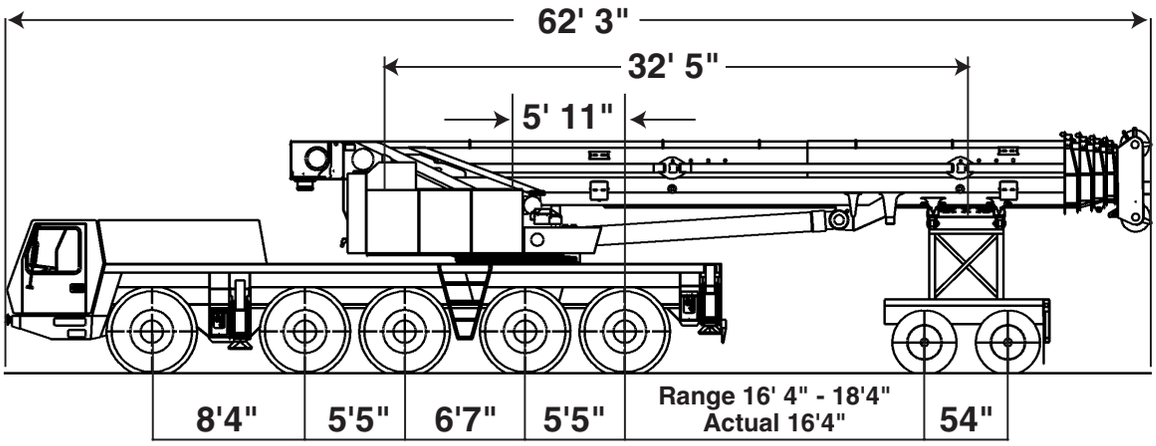

Boom Extended 0 Feet

Front 3 Axles	Rear 2 Axles	Dolly Axles
63,825 lbs.	30,741 lbs.	28,549 lbs.

G.V.W.
123,115 lbs.

Unit configured as follows:

42 – 167 ft. Boom

3MT counterweight on superstructure or carrier deck

20.5 tires

10 x 8 x 10 Drive

Outrigger pads on machine

Main & auxilliary hoists with wire rope

39 – 59 ft. hydraulically offsettable swingaway

Additional oil cooler

2-Axle boom dolly (5,700 lbs.)

Weights may vary due to manufacturing tolerances

THIS ILLUSTRATION IS ONLY A GUIDE. CONSULT FACTORY FOR SPECIFIC DETAILS.

View thousands of Crane Specifications on FreeCraneSpecs.com

Superstructure Specifications

Boom
42 ft. - 167 ft. (12.8 m - 51 m) five section, full power MEGAFORM™ boom with patented TWIN-LOCK™ boom pinning system. Maximum tip height: 177 ft. (54 m).

Boom Elevation
Single lift cylinder with safety valve provides boom angle from -3° to +83°.

Lattice Jib Extension
Two 26 ft. (8 m) inserts for use with lattice swingaway extension to increase length up to 85 ft. (26 m) or 112 ft. (34 m).

Hydraulic Offsettable Lattice Swingaway
36 ft. - 59 ft. (11 m - 18 m) hydraulic offsettable lattice swingaway extension. Hydraulically offsettable 5°-40° with hydraulic luffing.

*Optional Lattice Extension
36 ft. - 59 ft. (11 m - 18 m) lattice swingaway extension offsettable at 0°, 20° and 40°.

Load Moment & Anti-Two Block System
Load moment and anti-two block system with audio/visual warning and control lever lockout provides electronic display of boom angle, length, radius, tip height, relative load moment, maximum permissible load, load indication and warning of impending two-block condition.

Cab
All aluminum construction cab is hydraulically tiltable (approximately 20°) and includes safety glass and adjustable operator's seat with hydraulic suspension. Other features include engine dependent hot water heater, armrest integrated crane controls, and ergonomically arranged instrumentation.

Swing
2 swing gears with axial piston fixed displacement motors provide swing speed of 0 - 1.7 RPM thru planetary gear box. Holding brake and service brake.

Counterweight
68,300 lbs. (31,000 kg) consisting of various sections with hydraulic installation/removal system.

Engine
Mercedes-Benz OM904LA, diesel, 4 cylinders, water cooled, turbocharged, 168 HP (125 kW) at 2300 rpm. Max. torque: 487 ft./lbs. (660 Nm) at 1200 rpm. Engine emission: EURO II/EUROMOT/EPA/CARB (non road).

Fuel Tank Capacity
53 gal. (200 L).

Hydraulic system
2 separate circuits, 1 axial piston variable displacement pump (load sensing) with electronic power limiting control and 1 gear pump for swing. Standard thermostatically controlled oil cooler keeps oil at optimum operating temperature.
Tank capacity: 222 gal. (840 L)

Control system
Full electronic control of all crane movements is accomplished using electrical control levers with automatic reset to zero. Controls are integrated with the LMI and engine management system by CAN-BUS.

Hoist
Main and auxiliary hoist are powered by axial piston motor with planetary gear and brake. "Thumb-thumper" hoist drum rotation indicator alerts operator of hoist movement.

	Main	Auxiliary
Line length:	738 ft. (225 m)	591 ft. (180 m)
Rope diameter:	19 mm	19 mm
Line speed:	394 ft./min. (120 m)	394 ft./min. (120 m)
Line pull:	15,400 lbs. (70 kN)	15,400 lbs. (70 kN)

Electrical system
24 V system with three-phase alternator 28 V/80 A, 2 batteries 12 V/170 Ah.

* Optional equipment
* Engine-independent hot water heater, with engine pre-heater
* Second spotlight
* Stereo/cassette player
* Air Conditioning

View thousands of Crane Specifications on FreeCraneSpecs.com

Carrier Specifications

Chassis
Box-type, torsion resistant frame is fabricated from high-strength steel.

Outrigger System
Four hydraulic two-stage outrigger beams with vertical cylinders and outrigger pads. Outriggers can be set in two positions:

Fully extended (100%) - 24' 7" (7.5 m)
Partially extended (50%) - 16' 9" (5.1 m)

Independent horizontal and vertical movement control on each side of carrier. Crane level indicators at each control station.

Engine
Mercedes-Benz OM502LA, diesel, 8 cylinders, water cooled, turbo charged, 469 HP (350 kW) at 1800 rpm. Max. torque: 1,696 ft./lbs. (2300 Nm) at 1080 rpm. Engine emission: EURO II/EUROMOT/EPA/CARB (non road).

Fuel Tank Capacity
106 gal. (400 L).

Transmission
Daimler Chrysler G 240-16 with EAS (Electronic Automatic Shifting), 16 forward and 2 reverse speeds. Single speed transfer case with inter-axle differential lock.

Drive/Steer
10 x 8 x 10

Axles
1st axle line - steer
2nd axle line - drive/steer
3rd axle line - drive/steer
4th axle line - drive/steer (off road only)
5th axle line - drive/steer
Drive axles with planetary hub reduction and center mounted gearing.

Suspension
GROVE GMK5120B features the Grove exclusive MEGATRAK™ suspension. This revolutionary design features an independent hydroneumatic system with hydraulic lockout acting on all wheels. The suspension can be raised 6-1/2" (170 mm) or lowered 5" (130 mm) both longitudinally and transversely and features an automatic leveling system for on-highway travel.

Tires
10 tires, 20.5 R25.

Steering
Dual circuit steering system is hydraulic power assisted with a transfer case mounted, ground driven, emergency steering pump. Axles 1, 2, 3 and 5 steer on highway. Separate steering of the 4th and 5th axle for all wheel steer and crab-steer is controlled by an electric rocker switch.

Brakes
A dual circuit air system operates on all wheels with a spring-applied, air released parking brake acting on axles 2, 3, 4 and 5. An air dryer is fitted to remove moisture from the air system.
Anti-lock braking system (ABS).
Auxiliary exhaust brake and constant throttle brake is standard.

Cab
Two-man, aluminum construction driver's cab with thru access, includes the following features: safety glass; driver and passenger seats with hydraulic suspension, engine-dependent hot water heater, complete instrumentation and driving controls.

Electrical system
24 V system with three-phase alternator 28 V/100 A, 2 batteries 12 V/170 Ah.

Maximum Speed
53 mph (85 km/h) with 20.5 R25 tires.

Gradeability (Theoretical)
63% with 20.5 R25 tires.

Miscellaneous standard equipment
Trailing boom kit (less dolly); additional hydraulic oil cooler; spare tire and wheel - 20.5 R25 with carry bracket; flashing amber warning light on carrier cab; working light; tool kit; fire extinguisher; rooster sheave; radio cassette in carrier cab.

* Optional equipment
* 10 x 6 x 10 drive/steer
* Electric driveline retarder
* 16.00 R25 tires (vehicle width 9 ft. 10 in. [3 m])
* 14.00 R25 tires (vehicle width 9 ft. [2.75 m])
* Engine-independent hot water heater, with engine pre-heater
* Trailing boom "boost" weight transfer kit
* Air conditioning

*** Denotes optional equipment**

View thousands of Crane Specifications on FreeCraneSpecs.com

Working Range

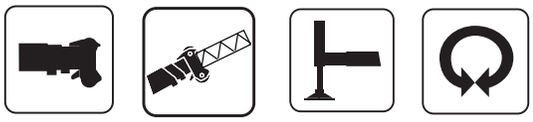

42 - 167 ft. (12.8 - 51 m) | 36 - 112 ft. (11 - 34 m) | 100% | 360°

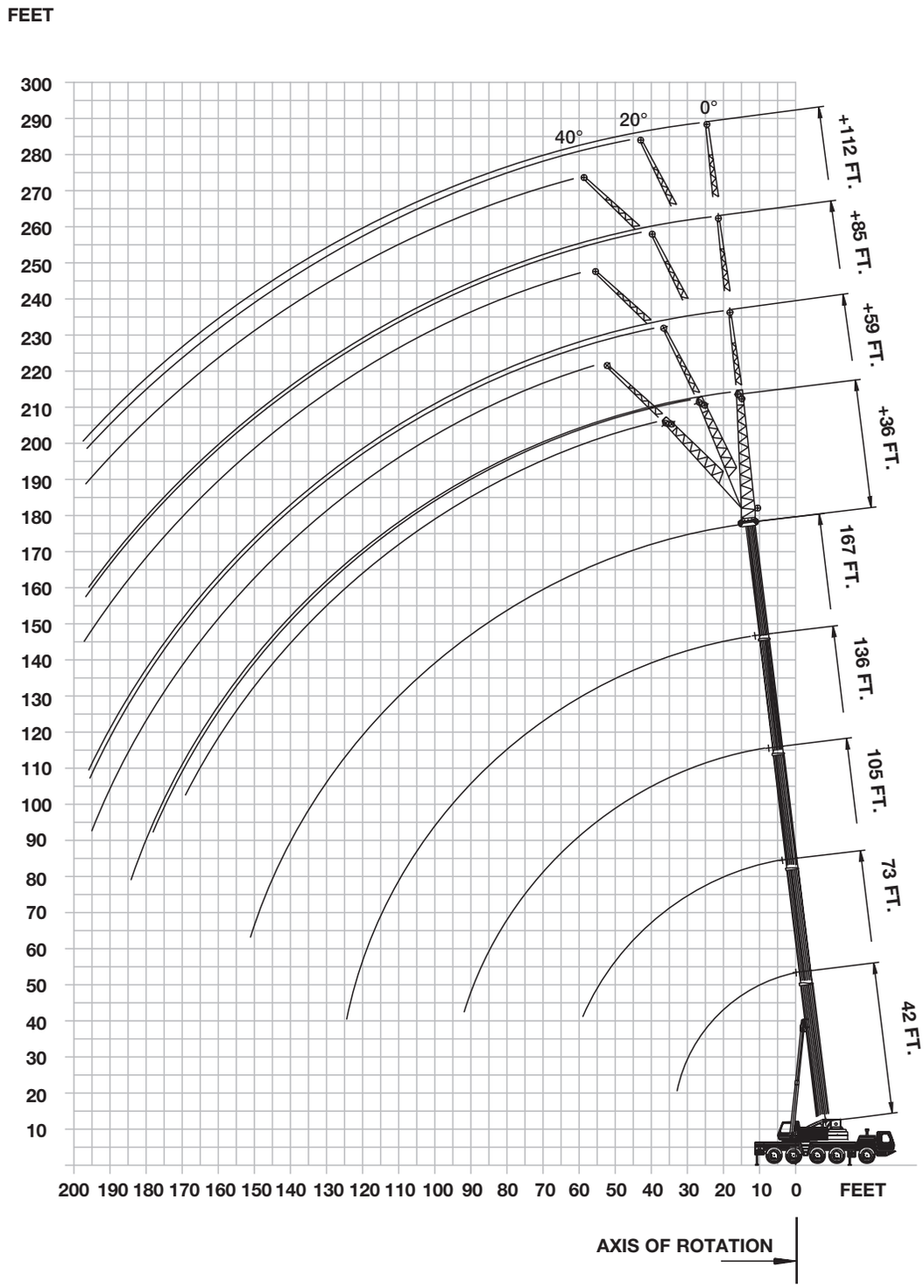

View thousands of Crane Specifications on FreeCraneSpecs.com

42 - 167 ft. (12.8 - 51.0 m) | 68,300 lbs. (31,000 kg) | 100% 24'7" Spread | 360°

Pounds (thousands)

Feet	42*	42	58	73	89	105	120	136	152	167
8	240.0									
9	228.0									
10	211.0	220.0	192.0	139.0						
15	168.0	168.0	161.0	139.0	121.0	90.0				
20	138.0	138.0	134.0	129.0	121.0	90.0	63.0	47.0		
25	114.0	114.0	114.0	110.0	108.0	88.0	63.0	47.0	35.8	
30	88.0	88.0	98.0	95.0	94.0	80.0	60.0	47.0	35.8	29.6
35			81.0	80.0	82.0	73.0	55.0	46.0	35.8	29.6
40			67.0	67.0	66.0	66.0	49.0	43.6	35.6	29.6
45			57.0	56.0	55.0	57.0	44.0	40.6	35.2	29.6
50				47.0	49.0	48.0	40.4	36.6	33.0	29.0
55				40.8	42.6	41.8	36.8	33.4	30.6	28.4
60					37.2	36.4	34.0	30.8	28.6	26.8
65					32.8	32.0	31.0	28.2	26.4	25.0
70					29.2	28.4	29.0	25.8	24.2	23.4
75					26.0	25.2	26.6	23.8	22.4	21.8
80						23.0	23.8	21.6	21.0	20.4
85						21.8	21.4	20.2	19.6	18.8
90						20.2	19.4	18.8	17.8	17.4
95							17.4	17.8	16.0	15.8
100							15.8	16.4	14.6	14.6
105								15.0	14.0	13.8
110								13.6	13.4	12.6
115								12.4	12.4	11.4
120								11.2	11.2	10.4
125									10.2	9.4
130									9.4	8.4
135									8.6	7.6
140										6.8
145										6.0
150										5.4

* Over rear only.
Lifting capacities greater than 210,000 lbs require additional equipment.
Note: Above chart is available with reduced outriggers.

42 - 167 ft. (12.8 - 51.0 m) | 24,200 lbs. (11,000 kg) | 100% 24'7" Spread | 360°

Pounds (thousands)

Feet	42*	42	58	73	89	105	120	136	152	167
8	240.0									
9	228.0									
10	211.0	220.0	192.0	139.0						
15	168.0	168.0	161.0	139.0	121.0	90.0				
20	138.0	132.0	126.0	114.0	107.0	90.0	63.0	47.0		
25	93.0	93.0	93.0	87.0	83.0	77.0	63.0	47.0	35.8	
30	65.0	65.0	69.0	67.0	66.0	61.0	56.0	47.0	35.8	29.6
35			53.0	55.0	53.0	49.0	49.0	44.0	35.8	29.6
40			42.2	43.6	43.6	41.0	41.2	38.8	35.6	29.6
45			34.4	35.8	35.8	37.4	34.8	33.4	30.0	29.6
50				30.2	30.0	31.4	29.6	29.4	28.2	25.8
55				25.4	27.2	26.8	26.0	25.8	24.4	22.2
60					23.2	22.8	23.4	22.4	21.2	19.2
65					20.0	20.0	20.2	19.6	18.6	16.6
70					17.2	17.4	17.6	16.8	16.2	14.4
75					15.0	15.0	15.2	14.6	14.2	12.6
80						13.0	13.4	12.6	12.4	11.0
85						11.4	11.6	11.0	10.6	9.4
90						10.0	10.2	9.6	9.2	8.2
95							8.8	8.2	8.0	7.0
100							7.8	7.2	6.8	5.8
105								6.2	5.8	4.8
110								5.2	5.0	4.0
115								4.4	4.2	3.2
120								3.6	3.4	2.4
125									2.8	
130									2.0	

* Over rear only.
Lifting capacities greater than 210,000 lbs require additional equipment.
Note: Above chart is available with reduced outriggers.

42 - 167 ft. (12.8 - 51.0 m) | 15,400 lbs. (7,000 kg) | 100% 24'7" Spread | 360°

Pounds (thousands)

Feet	42*	42	58	73	89	105	120	136	152	167
8	240.0									
9	228.0									
10	211.0	219.0	192.0	139.0						
15	168.0	167.0	161.0	139.0	121.0	90.0				
20	123.0	123.0	114.0	104.0	94.0	90.0	63.0	47.0		
25	81.0	81.0	81.0	76.0	74.0	68.0	62.0	47.0	35.8	
30	57.0	57.0	61.0	61.0	57.0	53.0	52.0	46.0	35.8	29.6
35			46.0	48.0	46.0	45.0	42.2	39.8	35.8	29.6
40			36.4	38.2	37.4	37.8	34.6	34.2	29.4	29.6
45			29.0	31.0	32.6	31.6	30.8	28.8	27.2	24.8
50				25.4	27.0	26.6	26.4	24.6	23.0	21.0
55				20.8	22.6	22.8	22.6	21.0	19.8	17.8
60					19.2	19.2	19.4	18.0	17.0	15.0
65					16.2	16.2	16.4	15.6	14.6	12.8
70					13.8	14.0	14.2	13.4	12.6	11.0
75					11.8	11.8	12.0	11.4	10.8	9.2
80						10.2	10.4	9.8	9.4	7.8
85						8.6	9.0	8.4	8.0	6.4
90						7.4	7.6	7.0	6.8	5.4
95							6.4	6.0	5.6	4.4
100							5.4	5.0	4.6	3.4
105								4.0	3.8	2.6
110								3.2	3.0	
115								2.4	2.2	

* Over rear only.
Lifting capacities greater than 210,000 lbs require additional equipment.
Note: Above chart is available with reduced outriggers.

THIS CHART IS ONLY A GUIDE AND SHOULD NOT BE USED TO OPERATE THE CRANE.
The individual crane's load chart, operating instructions and other instructional plates must be read and understood prior to operating the crane.

View thousands of Crane Specifications on FreeCraneSpecs.com

42 - 167 ft. (12.8 - 51.0 m) | 8,800 lbs. (4,000 kg) | 100% 24'7" Spread | 360°

Pounds (thousands)

Feet	42	58	73	89	105	120	136	152	167
10	218.0	192.0	139.0						
15	165.0	144.0	122.0	110.0	90.0				
20	104.0	94.0	85.0	80.0	72.0	63.0	47.0		
25	74.0	70.0	66.0	61.0	56.0	49.0	45.0	35.8	
30	51.0	54.0	51.0	47.0	46.0	41.8	40.0	34.0	29.6
35		41.8	40.8	40.0	37.0	35.6	32.6	29.2	27.2
40		32.0	33.0	32.8	30.4	29.4	27.0	25.2	22.4
45		25.0	27.2	27.6	26.0	24.8	22.8	21.0	18.6
50			22.0	23.2	22.0	21.0	19.2	17.8	15.6
55			17.8	19.6	18.8	18.0	16.4	15.0	13.0
60				16.4	16.0	15.4	14.0	12.8	10.8
65				13.8	13.8	13.4	12.0	10.8	9.0
70				11.6	11.6	11.4	10.2	9.2	7.4
75				9.8	9.8	10.0	8.6	7.8	6.0
80					8.2	8.4	7.4	6.6	4.8
85					7.0	7.2	6.2	5.4	3.8
90					5.8	6.0	5.2	4.4	2.8
95						5.0	4.2	3.4	
100						4.0	3.4	2.6	
105							2.6		

Lifting capacities greater than 210,000 lbs require additional equipment.
Note: Above chart is available with reduced outriggers.

42 - 167 ft. (12.8 - 51.0 m) | 2,200 lbs. (1,000 kg) | 100% 24'7" Spread | 360°

Pounds (thousands)

Feet	42	58	73	89	105	120	136	152	167
10	216.0	192.0	139.0						
15	156.0	130.0	116.0	105.0	90.0				
20	94.0	87.0	80.0	73.0	65.0	59.0	47.0		
25	66.0	63.0	59.0	54.0	52.0	47.0	43.8	35.8	
30	45.0	47.0	45.0	43.8	40.0	38.2	34.8	29.2	28.6
35		36.0	35.2	35.0	32.6	30.8	28.2	26.0	23.2
40		27.6	28.4	28.4	26.6	25.4	23.2	21.2	18.8
45		21.2	23.2	23.6	22.2	21.2	19.2	17.6	15.4
50			18.6	19.8	18.6	17.8	16.0	14.6	12.6
55			14.8	16.6	15.6	15.0	13.4	12.2	10.2
60				13.8	13.2	12.8	11.2	10.2	8.2
65				11.4	11.2	10.8	9.4	8.4	6.6
70				9.4	9.4	9.0	7.8	6.8	5.0
75				7.8	7.8	7.6	6.4	5.4	3.8
80					6.4	6.4	5.2	4.2	2.6
85					5.0	5.2	4.0	3.2	
90					4.0	4.2	3.0	2.4	
95						3.2	2.2		
100						2.4			

Lifting capacities greater than 210,000 lbs require additional equipment.
Note: Above chart is available with reduced outriggers.

Hydraulic Offsettable Swingaway

167 ft. (51.0 m) | 36-59-85-112 ft. (11-18-26-34 m) | 68,300 lbs. (31,000 kg) | 100% 24'7" Spread | 360°

Pounds (thousands)

	36 FT			59 FT			85 FT			112 FT		
Feet	5°	20°	40°	5°	20°	40°	5°	20°	40°	5°	20°	40°
30	17.4											
35	17.4											
40	17.4			11.6			7.8					
45	17.4	17.4		11.4			7.8					
50	17.4	17.4		11.4			7.8					
55	17.4	17.4	15.0	11.4			7.8					
60	17.4	17.4	14.8	11.2	10.4		7.8			4.8		
65	17.4	17.2	14.6	11.2	10.4		7.8			4.8		
70	17.0	16.6	14.4	11.2	10.2		7.8	7.8		4.8	4.8	
75	16.4	15.8	14.2	11.0	10.2	8.2	7.8	7.8		4.8	4.8	
80	15.8	15.2	13.8	11.0	10.2	8.0	7.8	7.8	7.4	4.8	4.8	
85	15.2	14.4	13.6	10.8	10.0	7.8	7.8	7.8	7.4	4.8	4.8	
90	14.4	13.8	13.4	10.8	10.0	7.8	7.8	7.8	7.4	4.8	4.8	
95	13.4	13.2	13.0	10.8	9.8	7.6	7.8	7.8	7.4	4.8	4.8	4.4
100	12.6	12.6	12.4	10.6	9.8	7.6	7.8	7.8	7.2	4.8	4.8	4.4
105	12.0	12.0	12.0	10.4	9.6	7.4	7.8	7.8	7.2	4.8	4.8	4.4
110	11.4	11.4	11.4	10.0	9.6	7.4	7.8	7.8	7.2	4.8	4.8	4.4
115	10.8	10.8	10.8	9.6	9.2	7.2	7.8	7.6	7.0	4.8	4.8	4.4
120	10.2	10.2	10.2	9.2	9.0	7.2	7.6	7.4	7.0	4.8	4.8	4.4
125	9.4	9.4	9.4	8.8	8.6	7.2	7.2	7.2	6.8	4.8	4.8	4.2
130	8.6	8.8	8.8	8.4	8.4	7.0	7.0	6.8	6.6	4.8	4.8	4.2
135	7.6	8.2	8.4	8.0	8.0	7.0	6.6	6.6	6.6	4.8	4.8	4.2
140	6.8	7.4	7.8	7.8	7.6	7.0	6.4	6.2	6.2	4.8	4.6	4.2
145	6.2	6.6	7.0	7.2	7.4	6.8	6.0	6.0	6.0	4.8	4.6	4.2
150	5.6	5.8	6.2	6.4	7.0	6.8	5.8	5.8	5.8	4.6	4.4	4.2
155	5.0	5.2	5.4	5.8	6.4	6.6	5.6	5.6	5.6	4.4	4.4	4.0
160	4.4	4.6		5.2	5.8	6.2	5.2	5.2	5.2	4.2	4.2	4.0
165	3.8	4.0		4.6	5.2	5.6	4.6	5.0	5.0	4.0	4.0	4.0
170	3.4	3.6		4.2	4.6	5.0	4.0	4.6	4.8	3.8	3.8	3.8
175	2.8	3.0		3.6	4.2	4.4	3.6	4.2	4.6	3.6	3.6	3.6
180	2.4	2.6		3.2	3.6		3.2	3.6	4.2	3.0	3.4	3.4
185	2.0			2.8	3.2		2.6	3.2	3.6	2.6	3.2	3.2
190	1.6			2.4	2.6		2.2	2.8	3.0	2.2	2.8	3.0
195				2.0	2.2		1.8	2.4	2.6	1.8	2.4	2.8
200					1.8		1.6	2.0	2.2		2.0	2.4
205											1.6	1.8

THIS CHART IS ONLY A GUIDE AND SHOULD NOT BE USED TO OPERATE THE CRANE.
The individual crane's load chart, operating instructions and other instructional plates must be read and understood prior to operating the crane.

View thousands of Crane Specifications on FreeCraneSpecs.com

167 ft. (51.0 m) | 36-59-85-112 ft. (11-18-26-34 m) | 68,300 lbs. (31,000 kg) | 100% 24'7" Spread | 360°

Pounds (thousands)

Feet	36 FT 5°-20°	36 FT 20°-40°	59 FT 5°-20°	59 FT 20°-40°	85 FT 5°-20°	85 FT 20°-40°	112 FT 5°-20°	112 FT 20°-40°
45	15.8							
50	15.8							
55	15.8	12.6						
60	15.8	12.4	9.4					
65	15.6	12.0	9.4					
70	15.0	11.8	9.4		7.2		4.4	
75	14.4	11.6	9.2	6.4	7.2		4.4	
80	13.8	11.4	9.2	6.2	7.2	6.4	4.4	
85	13.2	11.0	9.2	6.2	7.2	6.2	4.4	
90	12.6	10.8	9.0	6.0	7.2	6.2	4.4	4.0
95	12.0	10.6	9.0	5.8	7.2	6.0	4.4	4.0
100	11.4	10.4	9.0	5.8	7.2	5.8	4.4	4.0
105	10.8	10.4	8.8	5.6	7.2	5.8	4.4	4.0
110	10.4	10.2	8.6	5.6	7.0	5.6	4.4	4.0
115	9.8	9.8	8.2	5.4	7.0	5.6	4.4	4.0
120	9.2	9.2	8.0	5.4	6.8	5.4	4.4	4.0
125	8.6	8.6	7.8	5.2	6.4	5.4	4.4	3.8
130	7.8	8.0	7.6	5.2	6.2	5.4	4.4	3.8
135	7.0	7.4	7.2	5.0	6.0	5.2	4.4	3.8
140	6.2	6.6	7.0	5.0	5.8	5.2	4.2	3.8
145	5.6	6.0	6.4	5.0	5.4	5.2	4.2	3.8
150	5.0	5.4	5.8	5.0	5.2	5.0	4.0	3.8
155	4.4	4.8	5.2	4.8	5.2	5.0	4.0	3.8
160	4.0		4.8	4.8	4.6	4.8	3.8	3.6
165	3.4		4.2	4.8	4.2	4.6	3.6	3.6
170	3.0		3.8	4.2	3.8	4.2	3.4	3.4
175	2.6		3.4	3.8	3.2	3.8	3.2	3.2
180	2.2		2.8		2.8	3.4	2.8	3.0
185			2.6		2.4	2.8	2.4	2.8
190			2.2		2.0	2.4	2.0	2.4
195			1.8		1.8	2.2	1.6	2.2
200						1.8		1.8

167 ft. (51.0 m) | 36-59-85-112 ft. (11-18-26-34 m) | 24,200 lbs. (11,000 kg) | 100% 24'7" Spread | 360°

Pounds (thousands)

Feet	36 FT 5°	36 FT 20°	36 FT 40°	59 FT 5°	59 FT 20°	59 FT 40°	85 FT 5°	85 FT 20°	85 FT 40°	112 FT 5°	112 FT 20°	112 FT 40°
30	17.4											
35	17.4											
40	17.4			11.6			7.8					
45	17.4	17.4		11.4			7.8			4.8		
50	17.4	17.4		11.4			7.8			4.8		
55	17.4	17.4	15.0	11.4			7.8			4.8		
60	17.4	17.4	14.8	11.2	10.4		7.8			4.8		
65	15.8	17.2	14.6	11.2	10.4		7.8			4.8		
70	13.6	15.0	14.4	11.2	10.2		7.8	7.8		4.8	4.8	
75	11.8	13.0	14.2	11.0	10.2	8.2	7.8	7.8		4.8	4.8	
80	10.2	11.4	12.8	11.0	10.2	8.0	7.8	7.8	7.4	4.8	4.8	
85	8.8	10.0	11.2	9.8	10.0	7.8	7.8	7.8	7.4	4.8	4.8	
90	7.6	8.6	9.6	8.6	10.0	7.8	7.8	7.8	7.4	4.8	4.8	4.4
95	6.4	7.4	8.4	7.4	9.0	7.6	7.0	7.8	7.4	4.8	4.8	4.4
100	5.4	6.4	7.2	6.4	7.8	7.6	6.0	7.6	7.2	4.8	4.8	4.4
105	4.6	5.4	6.2	5.6	6.8	7.4	5.2	6.6	7.2	4.8	4.8	4.4
110	3.8	4.4	5.2	4.6	6.0	7.2	4.4	5.6	7.0	4.0	4.8	4.4
115	3.0	3.6	4.4	4.0	5.0	6.4	3.6	4.8	6.2	3.2	4.6	4.4
120	2.2	3.0	3.6	3.2	4.2	5.4	3.0	4.0	5.4	2.6	3.8	4.4
125	1.6	2.2	2.8	2.6	3.6	4.6	2.2	3.4	4.6	2.0	3.2	4.2
130		1.6	2.2	2.0	3.0	4.0	1.6	2.6	3.8		2.4	3.6
135					2.2	3.2		2.0	3.2		1.8	3.0
140					1.8	2.6		1.6	2.4			2.4
145						2.0			1.8			1.8

167 ft. (51.0 m) | 36-59-85-112 ft. (11-18-26-34 m) | 24,200 lbs. (11,000 kg) | 100% 24'7" Spread | 360°

Pounds (thousands)

Feet	36 FT 5°-20°	36 FT 20°-40°	59 FT 5°-20°	59 FT 20°-40°	85 FT 5°-20°	85 FT 20°-40°	112 FT 5°-20°	112 FT 20°-40°
45	15.8							
50	15.8							
55	15.8	12.6						
60	15.8	12.4	9.4					
65	14.4	12.0	9.4					
70	12.4	11.8	9.4		7.2		4.4	
75	10.8	11.6	9.2	6.4	7.2		4.4	
80	9.4	10.4	9.2	6.2	7.2	6.4	4.4	
85	8.0	9.0	9.0	6.2	7.2	6.2	4.4	
90	7.0	7.8	7.8	6.0	7.2	6.2	4.4	4.0
95	6.0	6.8	6.8	5.8	6.4	6.0	4.4	4.0
100	5.0	5.8	5.8	5.8	5.6	5.8	4.4	4.0
105	4.2	4.8	5.0	5.6	4.8	5.8	4.4	4.0
110	3.4	4.0	4.2	5.4	4.0	5.2	3.6	4.0
115	2.8	3.4	3.6	4.6	3.2	4.4	3.0	4.0
120	2.0	2.6	3.0	3.8	2.6	3.6	2.4	3.4
125		2.0	2.4	3.2	2.0	3.0	1.8	2.8
130			1.8	2.6	1.6	2.4		2.2
135				2.0		2.0		1.6
140				1.6				

THIS CHART IS ONLY A GUIDE AND SHOULD NOT BE USED TO OPERATE THE CRANE.
The individual crane's load chart, operating instructions and other instructional plates must be read and understood prior to operating the crane.

View thousands of Crane Specifications on FreeCraneSpecs.com

167 ft. (51.0 m) | 36-59 ft. (11-18 m) | 15,400 lbs. (7,000 kg) | 100% 24'7" Spread | 360°

Pounds (thousands)

Feet	36 FT 5°	36 FT 20°	36 FT 40°	59 FT 5°	59 FT 20°	59 FT 40°
30	17.4					
35	17.4					
40	17.4			11.6		
45	17.4	17.4		11.4		
50	17.4	17.4		11.4		
55	16.6	17.4	15.0	11.4		
60	14.2	15.8	14.8	11.2	10.4	
65	12.0	13.6	14.6	11.2	10.4	
70	10.2	11.6	13.2	11.2	10.2	
75	8.6	9.8	11.2	9.6	10.2	8.2
80	7.2	8.4	9.6	8.2	10.0	8.0
85	6.0	7.0	8.2	7.0	8.8	7.8
90	5.0	5.8	7.0	6.0	7.6	7.8
95	4.0	4.8	5.8	5.0	6.4	7.6
100	3.0	3.8	4.8	4.0	5.4	7.0
105	2.2	3.0	3.8	3.2	4.6	6.0
110	1.6	2.2	3.0	2.4	3.8	5.0
115		1.6	2.2	1.8	3.0	4.2
120					2.2	3.4
125					1.6	2.8
130						2.0

167 ft. (51.0 m) | 36-59 ft. (11-18 m) | 15,400 lbs. (7,000 kg) | 100% 24'7" Spread | 360°

Pounds (thousands)

Feet	36 FT 5°-20°	36 FT 20°-40°	59 FT 5°-20°	59 FT 20°-40°
45	15.8			
50	15.8			
55	15.2	12.6		
60	13.0	12.4	9.4	
65	11.0	12.0	9.4	
70	9.4	10.6	9.4	
75	7.8	9.0	8.8	6.4
80	6.6	7.6	7.4	6.2
85	5.4	6.4	6.4	6.2
90	4.4	5.4	5.4	6.0
95	3.6	4.4	4.4	5.8
100	2.8	3.6	3.6	5.0
105	2.0	2.8	3.0	4.2
110		2.0	2.2	3.4
115			1.6	2.6
120				2.0

Fixed Offsettable Swingaway

167 ft. (51.0 m) | 36-59-85-112 ft. (11-18-26-34 m) | 68,300 lbs. (31,000 kg) | 100% 24'7" Spread | 360°

Pounds (thousands)

Feet	36 FT 0°	36 FT 20°	36 FT 40°	59 FT 0°	59 FT 20°	59 FT 40°	85 FT 0°	85 FT 20°	85 FT 40°	112 FT 0°	112 FT 20°	112 FT 40°
30	17.6											
35	17.6			11.4								
40	17.6			11.4			7.8			4.8		
45	17.6	18.0		11.4			7.8			4.8		
50	17.6	18.0		11.4			7.8			4.8		
55	17.6	18.0	15.8	11.4			7.8			4.8		
60	17.6	17.6	15.6	11.4	10.4		7.8			4.8		
65	17.6	17.2	15.2	11.4	10.4		7.8			4.8		
70	17.6	16.6	15.0	11.2	10.2		7.8	8.6		4.8	5.4	
75	17.2	15.8	14.6	11.2	10.2	8.8	7.8	8.6		4.8	5.4	
80	16.4	15.2	14.2	11.2	10.0	8.8	7.8	8.4	7.4	4.8	5.4	
85	15.4	14.4	13.8	11.0	10.0	8.6	7.8	8.4	7.4	4.8	5.4	
90	14.4	13.8	13.4	11.0	9.8	8.6	7.8	8.2	7.4	4.8	5.4	4.4
95	13.4	13.2	13.0	11.0	9.6	8.4	7.8	8.2	7.4	4.8	5.4	4.4
100	12.6	12.6	12.4	10.8	9.4	8.4	7.8	8.0	7.2	4.8	5.4	4.4
105	12.0	12.0	12.0	10.6	9.2	8.4	7.8	7.8	7.2	4.8	5.4	4.4
110	11.4	11.4	11.4	10.2	9.0	8.2	7.8	7.8	7.2	4.8	5.2	4.4
115	10.8	10.8	11.0	9.8	8.8	8.2	7.8	7.6	7.0	4.8	5.2	4.4
120	10.0	10.2	10.6	9.4	8.6	8.2	7.6	7.4	7.0	4.8	5.0	4.4
125	9.4	9.6	10.0	9.0	8.4	8.0	7.2	7.2	6.8	4.8	5.0	4.2
130	8.6	9.0	9.4	8.6	8.2	8.0	7.0	6.8	6.6	4.8	4.8	4.2
135	7.8	8.4	8.8	8.2	8.0	7.8	6.6	6.6	6.6	4.8	4.8	4.2
140	7.0	7.6	8.0	7.8	7.6	7.6	6.4	6.2	6.4	4.8	4.6	4.2
145	6.4	6.8	7.2	7.2	7.4	7.4	6.0	6.0	6.2	4.8	4.6	4.2
150	5.6	6.2	6.4	6.4	7.0	7.2	5.8	5.8	6.0	4.6	4.4	4.2
155	5.0	5.4	5.8	5.8	6.6	7.0	5.4	5.6	5.8	4.4	4.4	4.0
160	4.4	4.8		5.2	6.0	6.6	5.2	5.2	5.6	4.2	4.2	4.0
165	4.0	4.2		4.6	5.4	5.8	4.6	5.0	5.4	4.0	4.0	4.0
170	3.4	3.8		4.2	4.8	5.2	4.2	4.8	5.0	3.6	3.8	4.0
175	3.0	3.2		3.8	4.4	4.6	3.6	4.4	4.8	3.4	3.6	3.8
180	2.4	2.8		3.2	3.8		3.2	4.0	4.4	3.2	3.4	3.6
185	2.0			2.8	3.4		2.8	3.4	3.8	2.6	3.2	3.4
190	1.6			2.4	2.8		2.4	3.0	3.4	2.2	3.0	3.2
195				2.0	2.4		2.0	2.6	2.8	1.8	2.6	3.0
200				1.6	2.0		1.6	2.2	2.4	1.6	2.2	2.6
205					1.6			1.8			1.8	2.2
210												1.8

THIS CHART IS ONLY A GUIDE AND SHOULD NOT BE USED TO OPERATE THE CRANE.
The individual crane's load chart, operating instructions and other instructional plates must be read and understood prior to operating the crane.

View thousands of Crane Specifications on FreeCraneSpecs.com

167 ft. (51.0 m) | 36-59-85-112 ft. (11-18-26-34 m) | 24,200 lbs. (11,000 kg) | 100% 24'7" Spread | 360°

Pounds (thousands)

Feet	36 FT 0°	36 FT 20°	36 FT 40°	59 FT 0°	59 FT 20°	59 FT 40°	85 FT 0°	85 FT 20°	85 FT 40°	112 FT 0°	112 FT 20°	112 FT 40°
30	17.6											
35	17.6			11.4								
40	17.6			11.4			7.8			4.8		
45	17.6	18.0		11.4			7.8			4.8		
50	17.6	18.0		11.4			7.8			4.8		
55	17.6	18.0	15.8	11.4			7.8			4.8		
60	17.6	17.6	15.6	11.4	10.4		7.8			4.8		
65	15.8	17.2	15.2	11.4	10.4		7.8			4.8		
70	13.8	15.4	15.0	11.2	10.2		7.8	8.6		4.8	5.4	
75	12.0	13.6	14.6	11.2	10.2	8.8	7.8	8.6		4.8	5.4	
80	10.4	11.8	13.2	11.0	10.0	8.8	7.8	8.4	7.4	4.8	5.4	
85	9.0	10.4	11.4	9.6	10.0	8.6	7.8	8.4	7.4	4.8	5.4	
90	7.8	9.0	10.0	8.4	9.8	8.6	7.8	8.2	7.4	4.8	5.4	4.4
95	6.6	7.8	8.8	7.2	9.2	8.4	7.0	8.2	7.4	4.8	5.4	4.4
100	5.6	6.8	7.6	6.4	8.2	8.4	6.0	7.8	7.2	4.8	5.4	4.4
105	4.8	5.8	6.6	5.4	7.2	8.4	5.2	7.0	7.2	4.8	5.4	4.4
110	4.0	4.8	5.6	4.6	6.2	7.6	4.4	6.0	7.2	4.0	5.2	4.4
115	3.2	4.0	4.8	3.8	5.4	6.6	3.6	5.2	6.4	3.2	4.8	4.4
120	2.4	3.2	3.8	3.2	4.6	5.8	3.0	4.4	5.6	2.6	4.2	4.4
125	1.8	2.6	3.2	2.6	3.8	5.0	2.4	3.8	4.8	2.0	3.4	4.2
130		2.0	2.4	2.0	3.2	4.2	1.8	3.0	4.2		2.8	4.0
135			1.8		2.6	3.4		2.4	3.4		2.2	3.2
140					2.0	2.8		1.8	2.8		1.6	2.6
145						2.2			2.2			2.0
150						1.6			1.6			1.6

167 ft. (51.0 m) | 36-59 ft. (11-18 m) | 15,400 lbs. (7,000 kg) | 100% 24'7" Spread | 360°

Pounds (thousands)

Feet	36 FT 0°	36 FT 20°	36 FT 40°	59 FT 0°	59 FT 20°	59 FT 40°
30	17.6					
35	17.6			11.4		
40	17.6			11.4		
45	17.6	18.0		11.4		
50	17.6	18.0		11.4		
55	16.6	18.0	15.8	11.4		
60	14.2	16.2	15.6	11.4	10.4	
65	12.0	14.0	15.2	11.4	10.4	
70	10.2	12.0	13.6	10.8	10.2	
75	8.8	10.4	11.6	9.4	10.2	8.8
80	7.4	8.8	10.0	8.0	10.0	8.8
85	6.2	7.4	8.6	6.8	9.0	8.6
90	5.0	6.4	7.4	5.8	7.8	8.6
95	4.0	5.2	6.2	4.8	6.8	8.4
100	3.2	4.2	5.2	4.0	5.8	7.4
105	2.4	3.4	4.2	3.2	4.8	6.2
110	1.6	2.6	3.4	2.4	4.0	5.4
115		2.0	2.6	1.8	3.2	4.4
120			1.8		2.6	3.8
125					2.0	3.0
130						2.4
135						1.6

Boom extension configurations

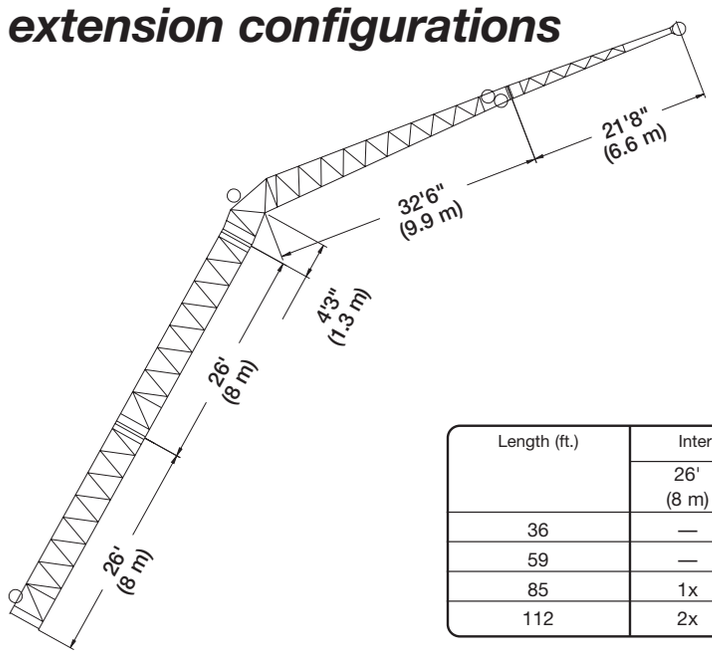

Length (ft.)	Intermediate section boom extension make-up			
	26' (8 m)	4'3" (1.3 m)	32'6" (9.9 m)	21'8" (6.6 m)
36	—	1x	1x	—
59	—	1x	1x	1x
85	1x	1x	1x	1x
112	2x	1x	1x	1x

THIS CHART IS ONLY A GUIDE AND SHOULD NOT BE USED TO OPERATE THE CRANE.
The individual crane's load chart, operating instructions and other instructional plates must be read and understood prior to operating the crane.

View thousands of Crane Specifications on FreeCraneSpecs.com

Counterweight configurations

1. 6,600 lbs. (3,000 kg)
2. 8,800 lbs. (4,000 kg)
3. 15,400 lbs. (7,000 kg)
4. 8,900 lbs. (4,000 kg)
5. 4,400 lbs. (2,000 kg)
6. 6,600 lbs. (3,000 kg)
7. 2 x 7,700 lbs. (3,500 kg)
8. 2,200 lbs. (1,000 kg) (or Auxiliary Hoist)

	1	2	3	4	5	6	2 Pieces 7	8
2,200 lbs.								x
8,800 lbs.						x		x
15,400 lbs.	x					x		x
24,200 lbs.	x	x				x		x
44,000 lbs.	x	x	x		x	x		x
52,900 lbs.	x	x	x	x	x	x		x
68,300 lbs.	x	x	x	x	x	x	x	x

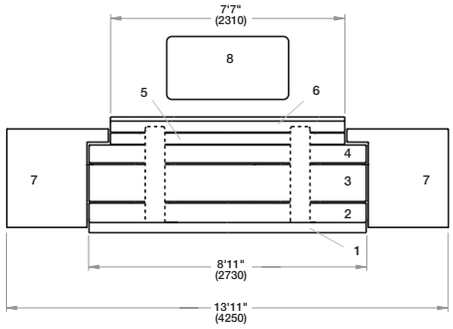

Overview of duty charts

42 – 167 m

360°

25.6 x 8.2 ft.

25.6 x 24.6 ft.

25.6 x 16.7 ft.

ft / Thousand lbs.	2.2	68.3	52.9	44	24.2	15.4	8.8	2.2	68.3	52.9	44	24.2	15.4	8.8	2.2
42*		•	•	•	•	•									
42	•	•	•	•	•	•	•	•	•	•	•	•	•	•	•
58		•	•	•	•	•	•		•	•	•	•	•	•	
73		•	•	•	•	•	•	•	•	•	•	•	•	•	•
89		•	•	•	•	•	•		•	•	•	•	•		
105		•	•	•	•	•	•	•	•	•	•	•	•		
120		•	•	•	•	•	•		•	•	•	•	•		
136		•	•	•	•	•	•	•	•	•	•	•	•		
152		•	•	•	•	•	•		•	•	•	•			
167		•	•	•	•	•	•	•	•	•	•	•			

* 0° over rear

Standard
5°, 20°, 40°
5°-20° 20°-40°
36/59/85/112 ft

Optional
0°, 20°, 40°
36/59/85/112 ft

25.6 x 24.6 ft

360°

68,300 lbs.

52,900 lbs.

44,000 lbs.

24,200 lbs.

15,400 lbs.

ft / ft	68,300 lbs. 36	59	85	112	52,900 lbs. 36	59	85	112	44,000 lbs. 36	59	85	112	24,200 lbs. 36	59	85	112	15,400 lbs. 36	59
105	•	•	•	•	•	•	•	•	•	•	•	•	•	•	•	•	•	•
120	•	•	•	•	•	•	•	•	•	•	•	•	•	•	•	•	•	•
136	•	•	•	•	•	•	•	•	•	•	•	•	•	•	•	•	•	•
152	•	•	•	•	•	•	•	•	•	•	•	•	•	•	•	•	•	•
167	•	•	•	•	•	•	•	•	•	•	•	•	•	•	•	•	•	•

0°, 20°, 40°
36/59 ft

25.6 x 16.7 ft

360°

68,300 lbs.

52,900 lbs.

44,000 lbs.

ft / ft	68,300 lbs. 36	59	52,900 lbs. 36	59	44,000 lbs. 36	59
105	•	•	•	•	•	•
120	•	•	•	•	•	•
136	•	•	•	•	•	•
152	•	•	•	•	•	•
167	•	•	•	•	•	•

View thousands of Crane Specifications on FreeCraneSpecs.com

Rated Lifting Capacities

IMPORTANT NOTES:

WARNING: THIS CHART IS ONLY A GUIDE. The notes below are for illustration only and should not be relied upon to operate the crane. The individual crane's load chart, operating instructions and other instruction plates must be read and understood prior to operating the crane.

1. All rated loads meet ANSI/ASME B30.5, Mobile and Locomotive Cranes. Testing and development were performed to SAEJ1063, Cantilevered Boom Crane Structures - Method of Test and SAEJ765 Crane Stability Test Code.

2. Capacities given do not include the weight of hook blocks, slings, auxiliary lifting equipment and load handling devices. Their weights must be added to the load to be lifted. When more than minimum required reeving is used, the additional rope weight shall be considered part of the load.

3. The machine shall be leveled on a firm supporting surface. Depending on the nature of the supporting surface, it may be necessary to have structural supports under the outrigger floats to spread the load to a larger bearing surface.

4. When either boom length or radius or both are between values listed, the smallest load shown at either the next larger radius or next longer or shorter boom length shall be used.

5. For outrigger operation, outriggers shall be properly extended with tires raised off the ground before operating the boom or lifting loads.

Symbols Glossary

View thousands of Crane Specifications on FreeCraneSpecs.com

GROVE®

GMK5120B Features and Benefits

MEGATRAK™ is an independent suspension and all wheel steer system which allows all wheels to remain on the ground at all times so stresses and weight are not continually transferred between axles

ECOS (Electronic Crane Operating System) is a computerized system that continuously monitors and controls principle crane functions as programmed by an operator

EKS4 is an electronic load moment indicator that operates in conjunction with ECOS continuously displaying crane configuration and load moment data

MEGAFORM™ is a “U” shape boom design which forms a natural cradle position for boom sections which eliminates stiffeners thus reducing weight and increasing capacity

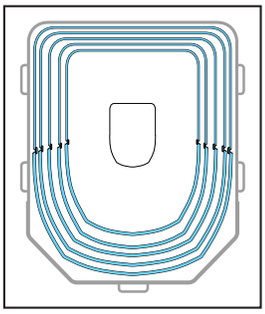

TWIN-LOCK™ is a boom pinning mechanism that automatically pins the sections in position using two horizontal large diameter boom pins

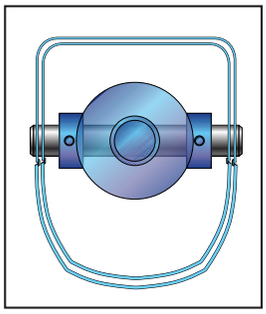

Grove Worldwide - World Headquarters
1565 Buchanan Trail East
P.O. Box 21
Shady Grove, Pennsylvania 17256-0021, U.S.A.
Tel: (717) 597-8121
Fax: (717) 597-4062
www.groveworldwide.com

Constant improvement and engineering progress make it necessary that we reserve the right to make specification, equipment, and price changes without notice. Illustrations shown may include optional equipment and accessories and may not include all standard equipment.

GROVE® and GROVE LOGO are registered trademarks of GROVE in the U.S. and/or other countries.
Copyright© 2000 GROVE. All rights reserved.

Form No.: GMK5120B Part No.: 01-209 0701-6M Printed in U.S.A.