View thousands of Crane Specifications on FreeCraneSpecs.com

INDUSTRIAL / OIL & GAS / MINING

CD4415 ROUGH TERRAIN CRANE

BADGER EQUIPMENT COMPANY

PRELIMINARY SPECIFICATION GUIDE

BIG JOB? SMALL SPACE? NO PROBLEM.

The new Badger CD4415 Rough Terrain Crane features:

- Rated capacity: 15 Ton (13.6 mT) at 10 ft. (3.0 m) working radius
- Maximum boom length: 62.5 ft. (19 m)
- Maximum tip height: 85.5 ft. (21.6 m)

06/26/2012

View thousands of Crane Specifications on FreeCraneSpecs.com

CONTENTS

Key

Key of Icons 3

Dimensions

Crane Dimensions 4

Crane Weights 4

Preliminary Range Diagram 5

Area of Operation 6

Preliminary Load Charts

Preliminary Load Chart – Main Boom – On Outriggers 7

Preliminary Load Chart – Main Boom – On Tires 8

Technical Description

Boom 9

Hoist, Rope and Hook 9

Superstructure 10

Cab, Controls, Operator Aids and Load Limiter / Load Indicator 10

Carrier, Engine, Drive-line and Hydraulic System 11

Vehicle Performance 12

Tires 12

BADGER EQUIPMENT COMPANY

Constant improvements and engineering progress make it necessary that Badger Equipment Company reserves the right to change designs, specifications and price changes without notice or obligation.

Drawings and/or photographs in this document are for illustrative purposes only and may include optional equipment and accessories and may not include all standard equipment. This document is non-contractual.

View thousands of Crane Specifications on FreeCraneSpecs.com

CD4415 ROUGH TERRAIN CRANE

KEY

Gross vehicle weight	Weight on front axle
Weight on rear axle	Swing on jib stowed
Standard (without hook block)	Lifting on wheels / Pick & carry
Hook block	Distance from hook to head sheave pin
Counterweight	Working radius
Telescoping mode	Boom length
Tip height	Lifting on wheels / Pick & carry
Outriggers / Lifting with outriggers	Hydraulic actuated boom
Full power mechanically synchronized	Boom elevation angle
Boom spike	Maximum line pull
Hoist speed	Rope - Standard/Optional
Rope diameter	Rope length
Maximum line pull	Hook and ball
Slewing / Allowable slewing range	Slewing locked / Slewing locked at specified position
Slewing brake	Slewing gears
Engine	Hydraulics
Cab	Controls
Heating / Air conditioning	Gross vehicle weight
Operator aids/Load limiter / Load indicator	Steering
Outriggers / Lifting on outriggers	Tires
Gradeability	Speed

View thousands of Crane Specifications on FreeCraneSpecs.com

DIMENSIONS

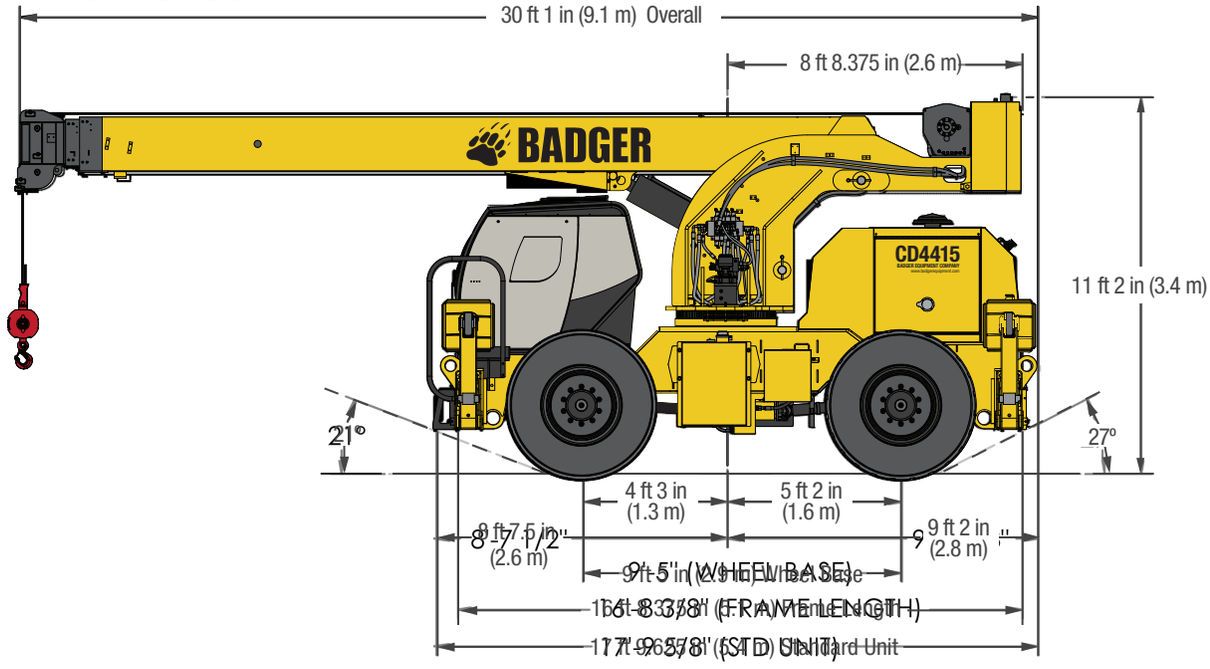

NOTE:

Tire Size	14.00 x 24	17 x 25
Track width	6 ft. 9 in. (2.1 m)	6 ft. 9 in. (2.1 m)
Overall width	7 ft. 11.8 in. (2.4 m)	8 ft. 4.9 in. (2.6 m)

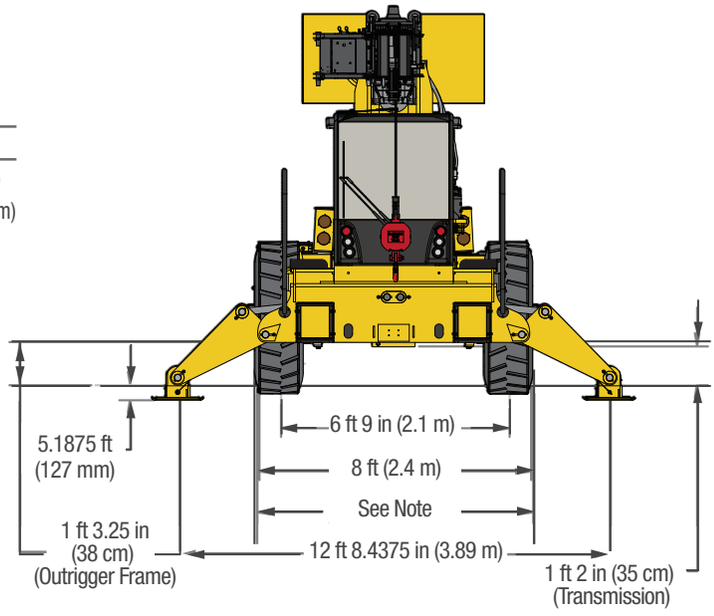

CRANE WEIGHTS

Standard (Without hook block)	41,800 lb. (18,960 kg)	17,480 lb. (7,930 kg)	24,324 lb. (11,033 kg)
24 ft (7.3 m) to 62 ft (18.9 m) swing on jib stowed	+609 lb. (+276 kg)	+86 lb. (+39kg)	+523 lb. (+237 kg)
15T (13.6 mT) 2 sheave hook block	+456 lb. (+207 kg)	+1,249 lb. (+566 kg)	-793 lb. (-360 kg)
7T (6.35 mT) hook & ball	+180 lb. (82 kg)	+493 lb. (+224 kg)	-313 lb. (-142 kg)

Note: Values are subject to 2% variation

View thousands of Crane Specifications on FreeCraneSpecs.com

PRELIMINARY RANGE DIAGRAM

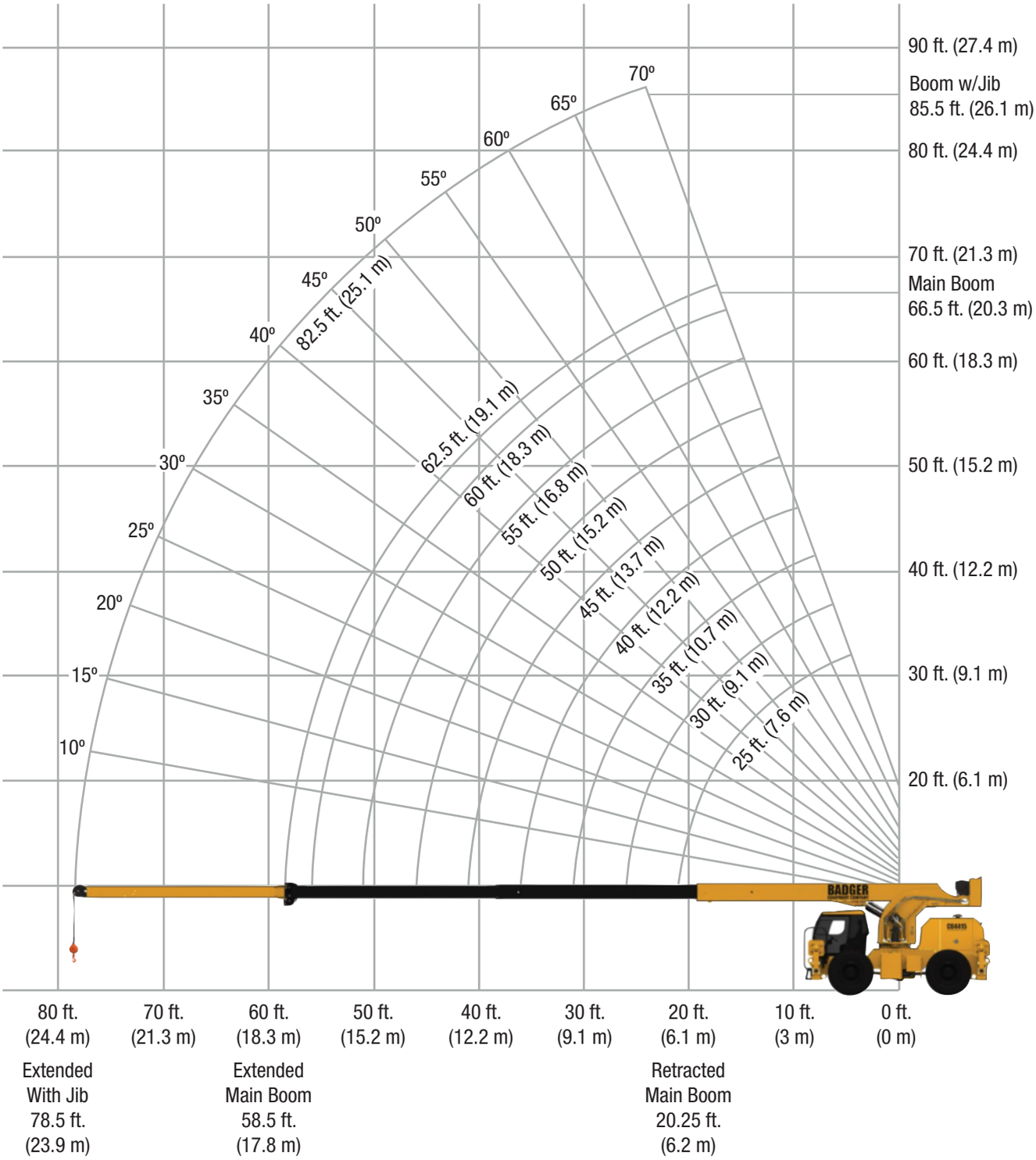

Data published herein is intended as a guide only. Crane operation is subject to the computer charts and operation manual supplied with the crane.

View thousands of Crane Specifications on FreeCraneSpecs.com

AREA OF OPERATION

ON OUTRIGGERS

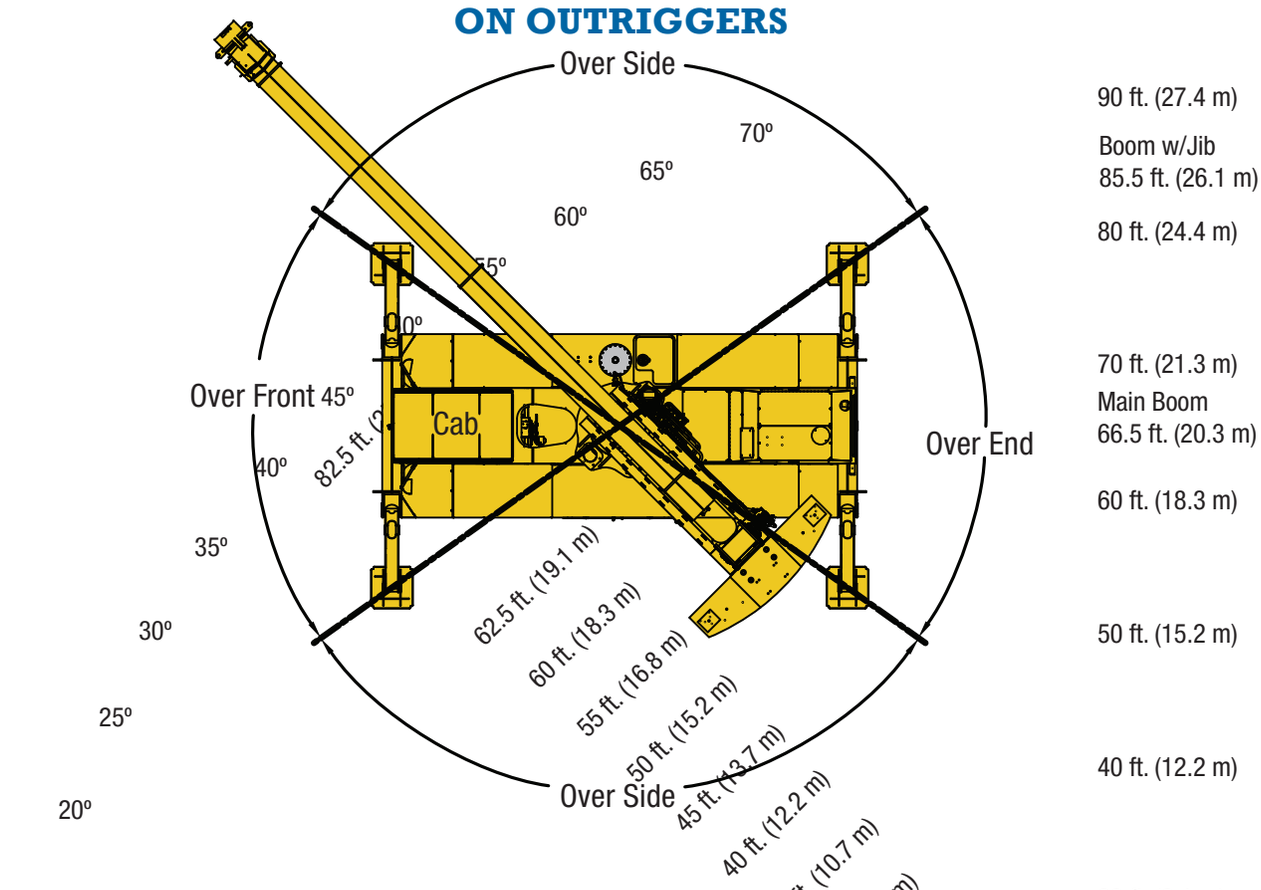

ON TIRES

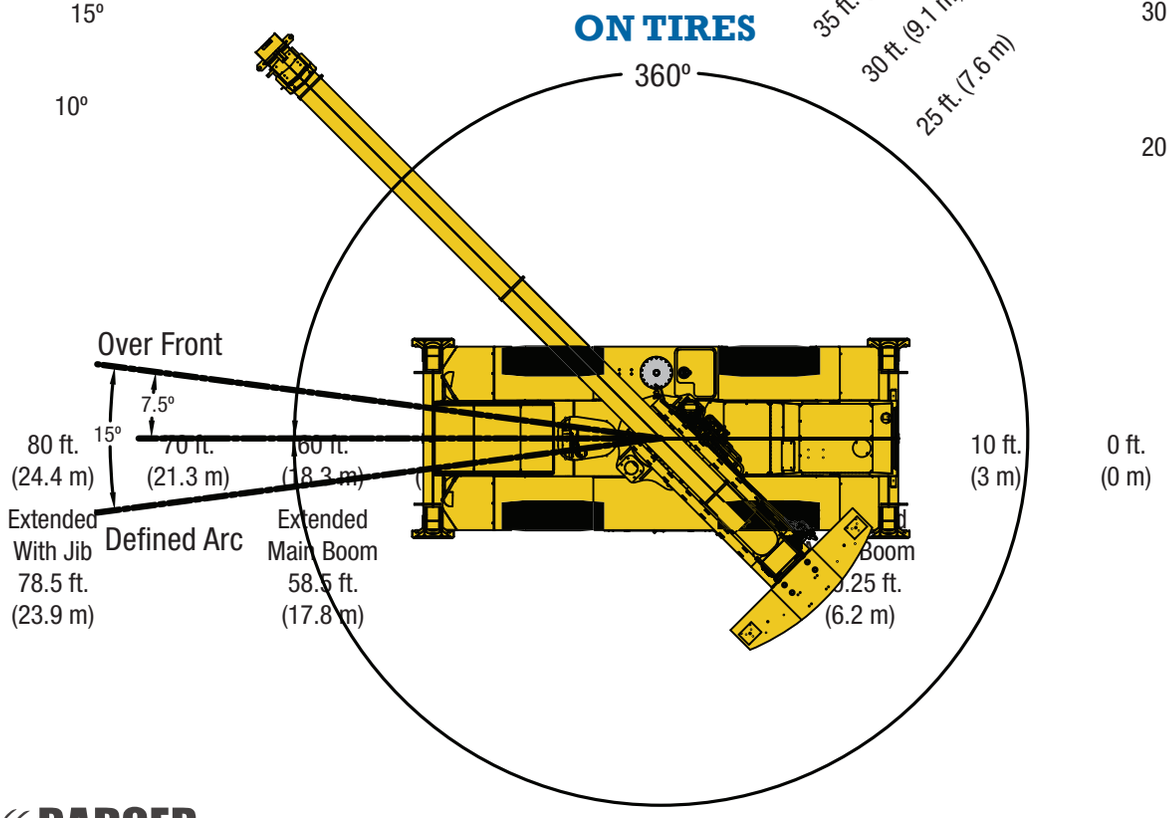

BADGER EQUIPMENT COMPANY

View thousands of Crane Specifications on FreeCraneSpecs.com

PRELIMINARY LOAD CHART: Main Boom - On Outriggers

Lifting Capacities 3 Section Boom 24 ft. (7.3 m) - 62 ft. (18.9 m) 7,200 lb. 14 ft. 6 in. (100%) 360º Standard ASME B30.5

	24 ft. Boom			30 ft. Boom			38 ft. Boom			46 ft. Boom			54 ft. Boom			62 ft. Boom		
	Boom Angle (Deg)	Over Front (lbs.)	360º (lbs.)	Boom Angle (Deg)	Over Front (lbs.)	360º (lbs.)	Boom Angle (Deg)	Over Front (lbs.)	360º (lbs.)	Boom Angle (Deg)	Over Front (lbs.)	360º (lbs.)	Boom Angle (Deg)	Over Front (lbs.)	360º (lbs.)	Boom Angle (Deg)	Over Front (lbs.)	360º (lbs.)
10 ft.	55º	30,000	30,000	62º	30,000	30,000	68º	30,000	30,000									
12 ft.	49º	30,000	30,000	58º	30,000	30,000	65º	28,000	28,000	70º	22,500	22,500						
14 ft.	42º	26,300	26,300	53º	26,400	26,400	62º	25,300	25,300	67º	20,900	20,900						
15 ft.	39º	24,400	24,400	51º	24,600	24,600	60º	24,000	24,000	66º	20,100	20,100	69º	17,000	17,000			
16 ft.	35º	22,800	22,800	48º	23,000	23,000	58º	23,000	23,000	64º	19,600	19,600	68º	16,400	16,400			
18 ft.	25º	20,100	20,100	43º	20,300	20,300	55º	20,400	20,400	61º	18,300	18,300	66º	15,400	15,400			
20 ft.	11º	17,900	17,900	37º	18,100	18,100	51º	18,200	18,200	58º	17,200	17,200	64º	14,600	14,600	67º	12,700	12,700
22 ft.				30º	16,300	16,100	47º	16,500	16,200	56º	16,300	16,300	61º	13,900	13,900	65º	12,000	12,000
24 ft.				21º	14,800	14,000	43º	15,000	14,200	52º	15,000	14,300	59º	13,100	13,100	63º	11,300	11,300
25 ft.				16º	14,200	13,200	40º	14,300	13,400	51º	14,400	13,400	57º	12,800	12,800	62º	10,900	10,900
26 ft.				6º	13,500	12,400	38º	13,700	12,600	49º	13,800	12,700	56º	12,400	12,400	61º	10,600	10,600
28 ft.							33º	12,600	11,300	46º	12,700	11,400	54º	11,700	11,300	59º	10,100	10,100
30 ft.							27º	11,300	10,200	42º	11,400	10,300	51º	11,000	10,200	57º	9,500	9,500
35 ft.										32º	9,100	8,200	44º	9,100	8,200	51º	8,400	8,300
40 ft.										17º	7,400	6,700	35º	7,400	6,700	45º	7,500	6,900
45 ft.													25º	6,200	5,600	38º	6,400	5,800
50 ft.													4º	5,300	4,800	30º	5,400	4,900
55 ft.																19º	4,700	4,300

20 ft. Jib on outriggers	
Boom Angle	360º (lbs.)
70º	6,500
60º	4,800
50º	3,900
40º	3,300
30º	2,900
20º	2,700
10º	2,600

Notes:

- *Deduct 400 lbs. for stowed jib*
- *Deduct 1,000 lbs. for erect jib*
- *Loads above heavy line are based on structural rating*
- *Loads below heavy line are based on tipping rating*
- *All "On Outrigger" tipping loads are based on 85% tipping*
- *Boom angles are undeflected boom angles*
- *9/16" - 6x 19 class - 6 x 25 FW, PRF, RRL, XIP, IWRC Wire Rope*
- *These load ratings are for lift service only*
- *Weight of hook blocks and slings is part of the load, and is to be deducted from the capacity ratings. Consult operation manual for further details.*

Structural
Tipping

View thousands of Crane Specifications on FreeCraneSpecs.com

PRELIMINARY LOAD CHART: Main Boom - On Tires

Lifting Capacities 3 Section Boom 24 ft. (7.3 m) - 62 ft. (18.9 m) 7,200 lb. On tires 20.5 x 25-24 PR 360º Standard ASME B30.5

	24 ft. Boom			30 ft. Boom			38 ft. Boom			46 ft. Boom			54 ft. Boom			62 ft. Boom		
	Boom Angle (Deg)	Over Front (lbs.)	360º (lbs.)	Boom Angle (Deg)	Over Front (lbs.)	360º (lbs.)	Boom Angle (Deg)	Over Front (lbs.)	360º (lbs.)	Boom Angle (Deg)	Over Front (lbs.)	360º (lbs.)	Boom Angle (Deg)	Over Front (lbs.)	360º (lbs.)	Boom Angle (Deg)	Over Front (lbs.)	360º (lbs.)
10 ft.	55º	24,500	19,500	62º	24,700	19,660	68º	24,800	19,800									
12 ft.	49º	17,800	14,600	58º	18,000	14,800	65º	18,100	14,900									
14 ft.	42º	13,900	11,600	53º	14,000	11,700	62º	14,100	11,900									
15 ft.	39º	12,500	10,500	51º	12,600	10,600	60º	12,700	10,700									
16 ft.	35º	11,300	9,600	48º	11,400	9,700	58º	11,500	9,800									
18 ft.	25º	9,400	8,000	43º	9,600	8,200	55º	9,700	8,300									
20 ft.	11º	8,000	6,900	37º	8,200	7,000	51º	8,300	7,100	58º	8,300	7,200						
22 ft.				30º	7,100	6,100	47º	7,200	6,200	56º	7,300	6,300						
24 ft.				21º	6,200	5,400	43º	6,400	5,500	52º	6,400	5,600						
25 ft.				16º	5,900	5,100	40º	6,000	5,200	51º	6,000	5,200						
26 ft.				6º	5,500	4,800	38º	5,700	4,900	49º	5,700	5,000						
28 ft.							33º	5,100	4,400	46º	5,100	4,500						
30 ft.							27º	4,600	4,000	42º	4,600	4,000						
35 ft.										32º	3,700	3,200	44º	3,700	3,200			
40 ft.										17º	3,000	2,600	35º	3,000	2,600			
45 ft.													25º	2,500	2,100	38	2,600	2,200
50 ft.													4º	2,000	1,700	30º	2,100	1,800
55 ft.																19º	1,800	1,600
										60º	Max Angle		50º	Max Angle		45º	Max Angle	

Notes:

- *Deduct 400 lbs. for stowed jlb*
- *Deduct 1,000 lbs. for erect jib*
- *17.5 x 25.20 ply tires, 90 psi recommended tire pressure*
- *Loads above heavy line are based on structural rating*
- *Loads below heavy line are based on tipping rating*
- *Lifting with jib on tires is not permitted*
- *Transport of erect jib is allowed with boom fully retracted, 5mph max*
- *Rotation of erect jib is allowed with boom fully retracted, creep only*
- *All "On Tires" tipping loads are based on 75% tipping*
- *Boom angles are undeflected boom angles*
- *9/16" - 6x 19 class - 6 x 25 FW, PRF, RRL, XIP, IWRC Wire Rope*

↑ Structural
— Tipping
↓

- *These load ratings are for lift service only.*
- *Weight of hook blocks and slings is part of the load, and is to be deducted from the capacity ratings. Consult operation manual for further details.*
- *Data published herein is intended as a guide only and shall not be construed to warrant applicability for lifting purposes.*
- *Crane operation is subject to the load charts or computer and operation manual both supplied with the crane.*
- *Pick & Carry permissible only with boom and load centered over front.*

View thousands of Crane Specifications on FreeCraneSpecs.com

TECHNICAL DESCRIPTION

Boom

Standard Configuration:

3 section hydraulic actuated boom	
Full power mechanically synchronized	
Min. / Max.	24 ft. / 62.5 ft. (7.3 m / 19 m)
Boom elevation angle range (min. / max.)	0º / 70º

Optional Configuration:

One section jib	20 ft. (6 m)
Offset	0º Fixed
Maximum tip height	85.5 ft. (20.1 m)

Hoist, Rope and Hook

Standard Configuration:

Grooved drum storage capacity	403 ft. (123 m)

	Single Speed (Standard)	Two Speed (Optional)
Without load in 5th layer (low range / high range)	242 fpm (1.23 mps)	297 fpm (1.78 mps)
Without load in 1st layer (low range / high range)	169 fpm (.85 mps)	207 fpm (1.05 mps) / 229 fpm (1.16 mps)

6 x 19 IWRC XIPS, right regular lay, preformed	
	0.56 in. (14.3 mm)
	390 ft. (119 m)

	Single Speed (Standard)		Two Speed (Optional)
Max. line pull: 1st layer low-range	10,750 lb. (4,886 kg)	Low Speed	11,350 lb. (5,160 kg)
Max. line pull permissible	7,500 lb. (3,400 kg)	High Speed	7,140 lb. (3,238 kg)

Optional Configuration:

7T Hook and Ball	180 lb. (82 kg)
Low Profile	456 lb. (207 kg)
2 Sheaves	456 lb. (207 kg)

BADGER EQUIPMENT COMPANY

View thousands of Crane Specifications on FreeCraneSpecs.com

Superstructure

Standard Configuration:

Non stop	360º
Maximum rotation speed without load	4.5 rpm

Hydraulic motor
Planetary reducer
Spring applied hydraulic released brakes

360º house lock	Manually applied

Cab, Controls, Operator Aids and Load Limiter/Indicator

Standard Configuration:

Rubber floor mat
Tinted safety glass
Six way adjustable seat
Heater/Defroster
Window wiper with washer and top window
Two lockable doors with sliding windows

Armrest mounted dual axis electro-proportional joysticks
Steering wheel column with gear selector on the right and directional light selector on the left
Dashboard mounted switches for outrigger operation

Optional Configuration:

Air conditioner
LED work lights
LED strobe light
Perimeter lights
Rearview camera
Front windshield guard
Falling Object Protection System (F.O.P.S.)

Graphic interface for load indicator

View thousands of Crane Specifications on FreeCraneSpecs.com

Carrier, Engine, Drive-line and Hydraulic System

Standard Configuration:

Hydraulic, independent extension:	
Outrigger pad size	16 in. x 16 in. (406 mm x 406 mm)
Area of outrigger pads	256 in.^{2} (1,652 cm^2)

Cummins® QSB4.5 Tier 3, 4 cylinders	
Rated power	160 hp (119 kW) @ 2,500 rpm
Maximum gross torque	460 ft.-lb. (624 Nm) @ 1,500 rpm
Intake	Turbocharger with intercooler
Fuel type	Diesel
Fuel tank capacity	50 gal. (189 L)

Optional Configuration:

Cat® C4.4 Tier 3, 4 cylinders	
Rated power	139 hp (104 kw) @ 2,200 rpm
Maximum gross torque	408 ft.-lb. (553 Nm) @ 1,400 rpm
Intake	Turbocharger with intercooler
Fuel type	Diesel
Fuel tank capacity	50 gal. (189 L)

Standard Configuration:

6 x 6 powershift transmission with integral torque converter	Limited slip on front axle
4WD (Four-Wheel Drive) with rear axle disconnect	Hydraulic over-hydraulic drum brakes
Rigid mounted front axle	Parking brake on front axle
Dampened rear axle	Hydraulic oil cooler on carrier

Hydraulic power steering	Four wheel steering crab
Front wheel steering	Independent rear wheel steering package
Four wheel steering coordinated	Rear wheel centering light indication

Hydraulic Pump: Axial Piston	69.5 gpm (263 lpm) @ 3,500 psi (241 bar)
Hydraulic oil reservoir capacity	75 gal. (284 L)
Hydraulic oil suction filter	850 microns with magnet
Hydraulic oil return filter	10 microns

BADGER EQUIPMENT COMPANY

View thousands of Crane Specifications on FreeCraneSpecs.com

Vehicle Performance

Standard Configuration:

Maximum Gradeability	Up to 80%, based on oil pan restrictions
Maximum Speed (6th gear)	
Cummins® Engine	26 mph (42 kph)
Cat® Engine	22 mph (35k ph)

Tires

Standard Configuration:

Wide tread earth mover pattern (E3)	20.5 x 25-20 PR

Optional Configuration:

Industrial pattern	14.00 x 24-20 PR

Notes:

BADGER EQUIPMENT COMPANY
217 Patneaude Drive | Winona, MN 55987
(800) 533-8013 | (507) 454-1563
www.BadgerEquipment.com

MANITEX INTERNATIONAL
A Manitex International Company